THIS DRAWING IS UNPUBLISHED. RELEASED FOR PUBLICATION -.-.
© COPYRIGHT - BY TYCO ELECTRONICS CORPORATION. ALL RIGHTS RESERVED.

LOC	DIST
GP	00

REVISIONS

P	LTR	DESCRIPTION	DATE	DWN	APVD
	A	REVISED PER EC 0S12-0210-05	20JUL06	BM	SB

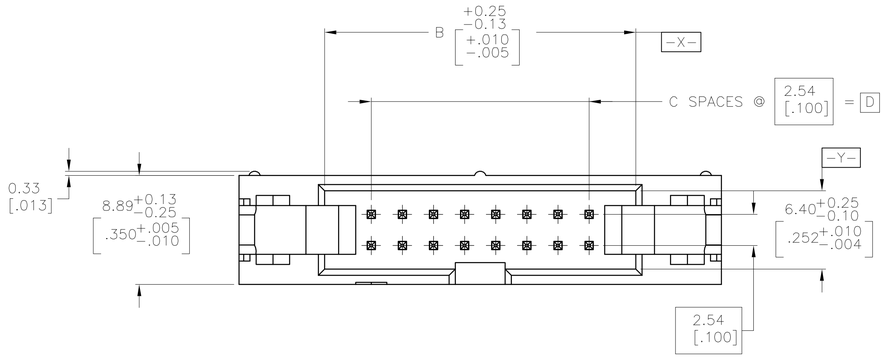

1. HOUSING & EJECT LATCHES: PBT, UL94V-0, COLOR BLUE. POSTS: PHOSPHOR BRONZE.
2. POSTS: 0.00076[.000030] MIN GOLD ON MATING AREA, 0.00254[.000100] MIN TIN ON SOLDER END, ALL OVER 0.00127[.000050] MIN NICKEL ON ENTIRE POST.
3. DATUMS S & T TO BE ESTABLISHED BY CUSTOMER.
4. SHORT EJECT LATCHES FOR MATING IDC/AMP-LATCH STYLE RECEPTACLES WITHOUT A STRAIN RELIEF.

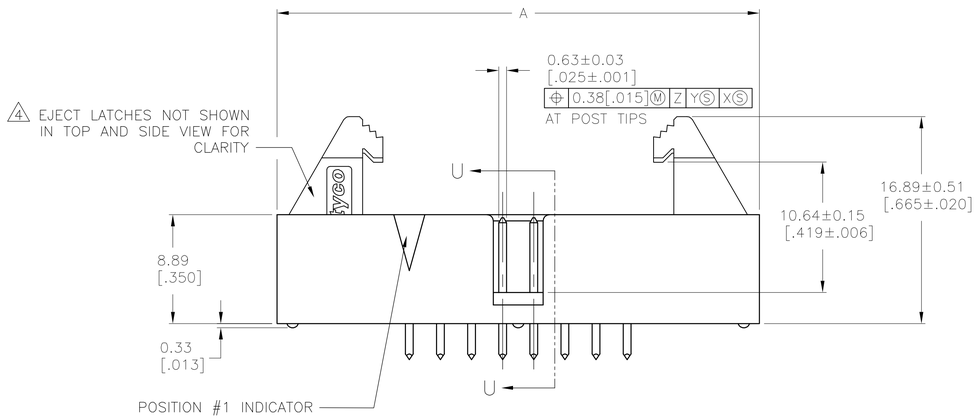

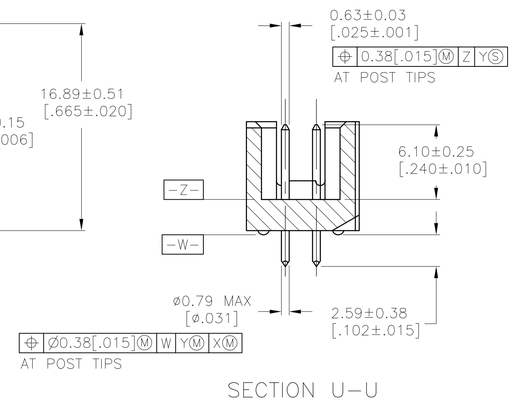

SECTION U-U

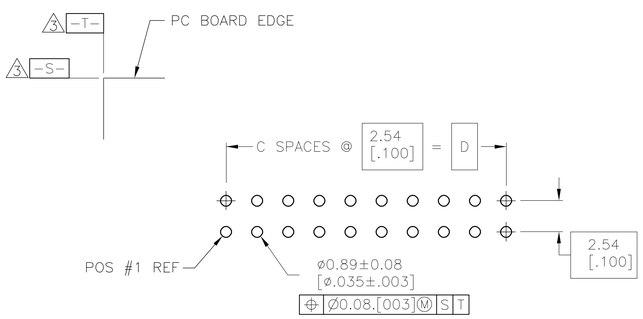

RECOMMENDED PC BOARD LAYOUT
(VIEWED FROM CONNECTOR SIDE)

	D	C	B	A	NO OF POS	PART NUMBER
OBSOLETE	78.74 [3.100]	31	86.36 [3.400]	100.33 [3.950]	64	1-1761685-7
	73.66 [2.900]	29	81.28 [3.200]	95.25 [3.750]	60	1-1761685-6
	60.96 [2.400]	24	68.58 [2.700]	82.55 [3.250]	50	1-1761685-5
	53.34 [2.100]	21	60.96 [2.400]	74.93 [2.950]	44	1-1761685-4
	48.26 [1.900]	19	55.88 [2.200]	69.85 [2.750]	40	1-1761685-3
OBSOLETE	43.18 [1.700]	17	50.80 [2.000]	64.77 [2.550]	36	1-1761685-2
	40.64 [1.600]	16	48.26 [1.900]	62.23 [2.450]	34	1-1761685-1
	35.56 [1.400]	14	43.18 [1.700]	57.15 [2.250]	30	1-1761685-0
	30.48 [1.200]	12	38.10 [1.500]	52.07 [2.050]	26	1761685-9
	27.94 [1.100]	11	35.56 [1.400]	49.53 [1.950]	24	1761685-8
	22.86 [.900]	9	30.48 [1.200]	44.45 [1.750]	20	1761685-7
	17.78 [.700]	7	25.40 [1.000]	39.37 [1.550]	16	1761685-6
OBSOLETE	15.24 [.600]	6	22.86 [.900]	36.83 [1.450]	14	1761685-5
OBSOLETE	12.70 [.500]	5	20.32 [.800]	34.29 [1.350]	12	1761685-4
	10.16 [.400]	4	17.78 [.700]	31.75 [1.250]	10	1761685-3

THIS DRAWING IS A CONTROLLED DOCUMENT.

DIMENSIONS: MM[INCHES]

TOLERANCES UNLESS OTHERWISE SPECIFIED:
0 PLC ± –
1 PLC ± –
2 PLC ± –
3 PLC ± 0.13[.005]
4 PLC ± –
ANGLES ± –

MATERIAL 1
FINISH 2

DWN 05JUN05 B. CRISAMORE/DTI
CHK 05JUN05 S.BOLASH
APVD 05JUN05 M.WALMSLEY
PRODUCT SPEC —
APPLICATION SPEC —
WEIGHT —

tyco Electronics
Tyco Electronics Corporation
Harrisburg, Pa 17105

NAME
HEADER ASSEMBLY, SHORT EJECT LATCH, VERTICAL, LOW PROFILE, IDC
—

SIZE	CAGE CODE	DRAWING NO	RESTRICTED TO
A1	00779	C-1761685	—

CUSTOMER DRAWING
SCALE 4:1 SHEET 1 OF 1 REV A