THIS DRAWING IS UNPUBLISHED. RELEASED FOR PUBLICATION -,- .
© COPYRIGHT - By - ALL RIGHTS RESERVED.

LOC	DIST
H	—

REVISIONS

P	LTR	DESCRIPTION	DATE	DWN	APVD
	J	ECR-07-020965	25-08-08	AEG	MKO
	J1	REVISED PER ECO-09-020935	31AUG09	KK	AEG
	J2	ECR-11-008320	18NOV11	RK	MKO

NOTES:

1. CONNECTOR MEETS THE REQUIREMENTS ACC. DIN 41612, PART 5.
2. MATERIAL CONTACT: PHOSPHORBRONZE. MATERIAL HOUSING: GLASSFILLED THERM. POLYESTER. COLOR:GREY
3. AT CONTACTAREA 1,25µm GOLD OVER 1,25µm NICKEL AT SOLDER POST AREA 1,25µm TIN.
4. AT CONTACTAREA 0,8µm GOLD OVER 1,25µm NICKEL AT SOLDER POST AREA 1,25µm TIN.
5. CONTACT ARRANGEMENTS; AN AN ASTERISK " X " DENOTES A SIGNAL CONTACT. AN ASTERISK " ⊗ " DENOTES A KINKED SIGNAL CONTACT.
6. AT CONTACTAREA 0,4µm GOLD OVER 1,25µm NICKEL AT SOLDER POST AREA 1,25µm TIN.
7. CONNECTOR PRINTED WITH PARTNUMBER AND DATECODE ON OUTSIDE OF MATING AREA AT SIDE OF ROW c.
8. SOLDER POSTS SUITABLE FOR 1,0 NOM. P.C.B. HOLES.
9. FLUX RESISTANCE STRIP.
10. KINKED POSTS.
11. AT CONTACTAREA 0,1µm GOLD OVER 0,7µm PALLADIUM (DURAGOLD) OVER 1,25µm NICKEL, AT SOLDERPOST AREA 1,25µm TIN.
12. OBSOLETE PARTS: OBSOLETE CIS STREAMLINING PER D.RENAUD/D.SINISI

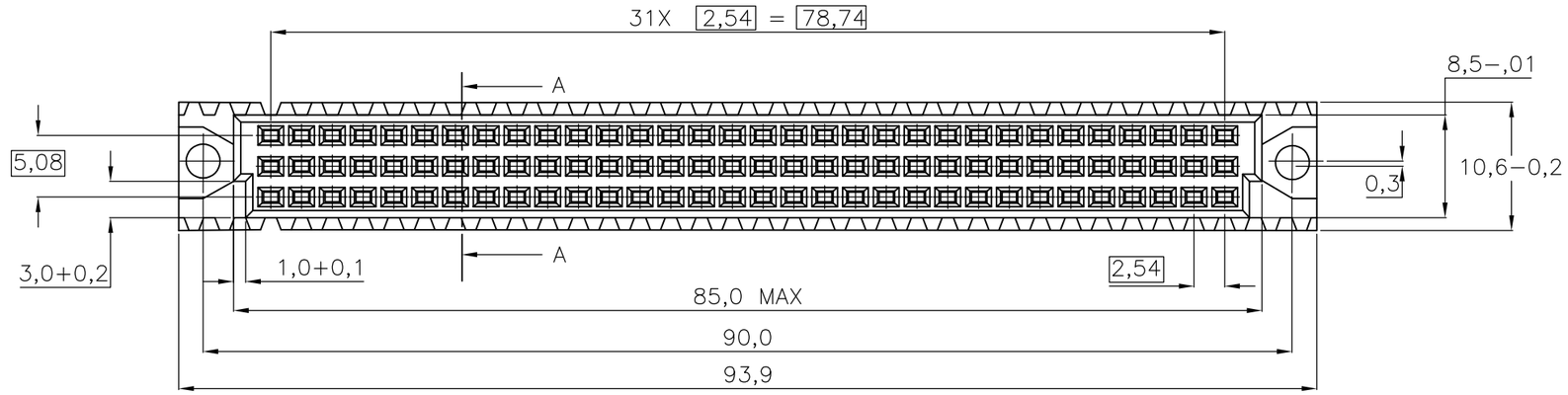

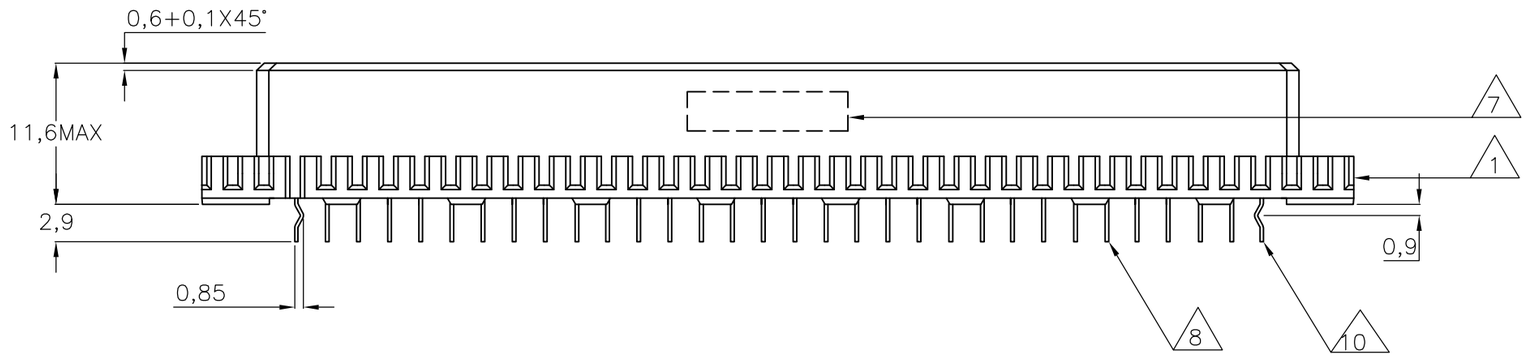

c	b	a	5
⊗	O	⊗	1
X	O	X	2
X	O	X	3
X	O	X	4
X	O	X	5
X	O	X	6
X	O	X	7
X	O	X	8
X	O	X	9
X	O	X	10
X	O	X	11
X	O	X	12
X	O	X	13
X	O	X	14
X	O	X	15
X	O	X	16
X	O	X	17
X	O	X	18
X	O	X	19
X	O	X	20
X	O	X	21
X	O	X	22
X	O	X	23
X	O	X	24
X	O	X	25
X	O	X	26
X	O	X	27
X	O	X	28
X	O	X	29
X	O	X	30
X	O	X	31
⊗	O	⊗	32

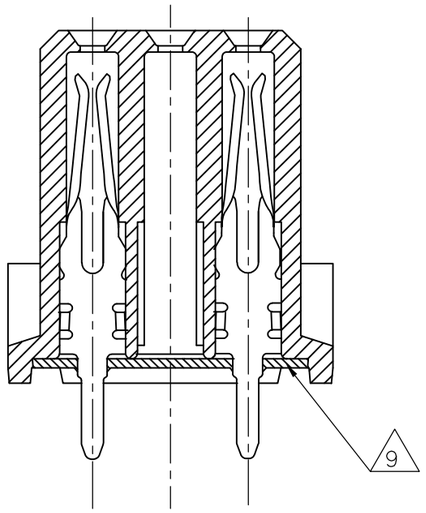

SECTION A-A

OBSOLETE	WITH	WITHOUT	11	2	7-216082-4
OBSOLETE	WITH	WITH	11	2	6-216082-4
12 OBSOLETE	WITH	WITHOUT	4	2	1-216082-4
OBSOLETE	WITH	WITH	6	2	216082-8
SUPERSEDED BY 2173045-4	WITH	WITH	4	2	216082-4
OBSOLETE	WITH	WITH	3	2	216082-1
	10	9	FINISH	MATERIAL	PARTNUMBER

THIS DRAWING IS A CONTROLLED DOCUMENT.

DIMENSIONS: mm

TOLERANCES UNLESS OTHERWISE SPECIFIED:
0 PLC ± -
1 PLC ± -
2 PLC ± -
3 PLC ± -
4 PLC ± -
ANGLES ± -

MATERIAL -

FINISH -

DWN J.V.LIEMPT. 19JUN91
CHK J.GIBBELS -
APVD — -
PRODUCT SPEC —
APPLICATION SPEC —
WEIGHT —

TE Connectivity

NAME
64 POS C FEMALE B.T.B. CONN.
ACC. DIN 41612 WITH SOLDER POSTS
FOR 1,6 mm. P.C.BOARD THK'S.

SIZE	CAGE CODE	DRAWING NO	RESTRICTED TO
A3	00779	C-216082	—

CUSTOMER DRAWING | SCALE NTS | SHEET 1 OF 1 | REV J2