THIS DRAWING IS UNPUBLISHED. RELEASED FOR PUBLICATION –,– .
© COPYRIGHT – By – ALL RIGHTS RESERVED.

REVISIONS

P	LTR	DESCRIPTION	DATE	DWN	APVD
	P1	ECR–16–004636	16–06–30	T.Q	W.H

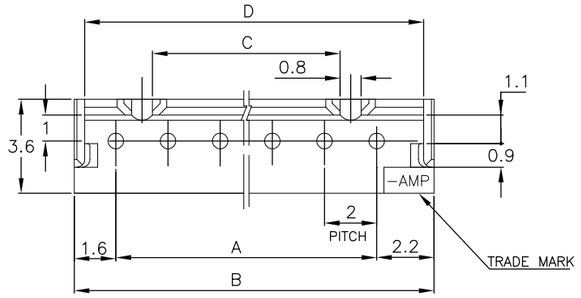

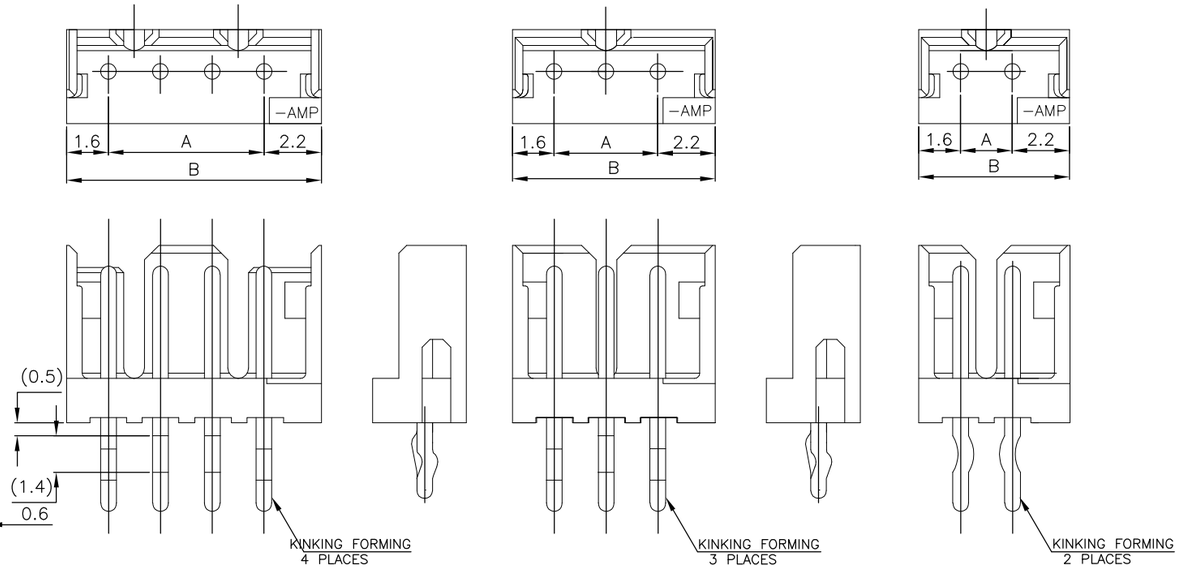

4 POS. 3 POS. 2 POS.

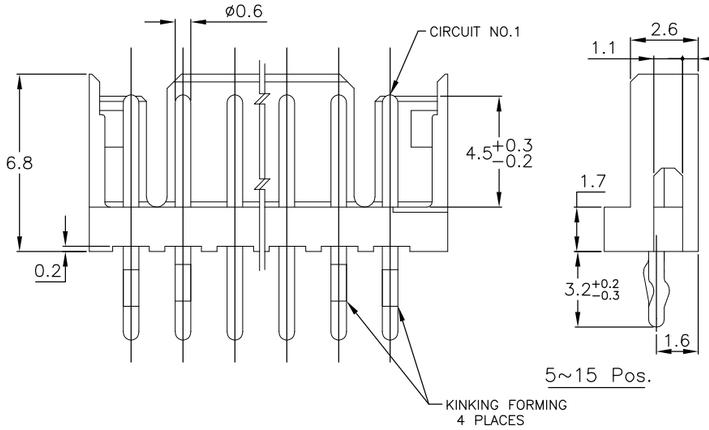

5~15 Pos.

NOTES:

1. MATERIAL: HOUSING – NYLON 66 (UL94V–0)
   POST – TIN BRASS
2. APPLICABLE RECEPTACLE P/N 173977
3. OBSOLETED RED COLOR PARTS.

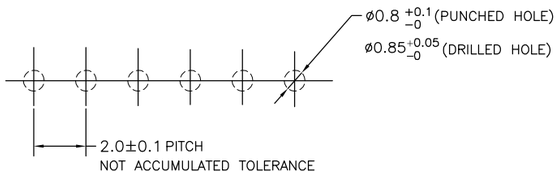

RECOMMENDABLE PCB LAYOUT
(PCB THK:0.8–1.6)

	7–292161–5	5–292161–5	3–292161–5	1–292161–5	15	28	31.8	25.2	31.0
	7– –4	5– –4	3– –4	1– –4	14	26	29.8	23.2	29.0
	7– –3	5– –3	3– –3	1– –3	13	24	27.8	21.2	27.0
~~9–292161–2~~	7– –2	5– –2	3– –2	1– –2	12	22	25.8	19.2	25.0
~~9– –1~~	7– –1	5– –1	3– –1	1– –1	11	20	23.8	17.2	23.0
~~9– –0~~	7– –0	5– –0	3– –0	1– –0	10	18	21.8	15.2	21.0
~~8– –9~~	6– –9	4– –9	2– –9	–9	9	16	19.8	13.2	19.0
~~8– –8~~	6– –8	4– –8	2– –8	–8	8	14	17.8	11.2	17.0
~~8– –7~~	6– –7	4– –7	2– –7	–7	7	12	15.8	9.2	15.0
~~8– –6~~	6– –6	4– –6	2– –6	–6	6	10	13.8	7.2	13.0
~~8– –5~~	6– –5	4– –5	2– –5	–5	5	8	11.8	5.2	11.0
~~8– –4~~	6– –4	4– –4	2– –4	–4	4	6	9.8	3.2	9.0
~~8– –3~~	6– –3	4– –3	2– –3	–3	3	4	7.8	—	7.0
~~8–292161–2~~	6–292161–2	4–292161–2	2–292161–2	292161–2	2	2	5.8	—	5.0
RED	BLACK	YELLOW	BLUE	NATURAL	Pos.	A	B	C	D
PART NO.									

TOLERANCES UNLESS OTHERWISE SPECIFIED:

10≥ * : ±0.2
30≥ * >10 : ±0.25
100≥ * >30 : ±0.3
ANGLE : ±3°

THIS DRAWING IS A CONTROLLED DOCUMENT.

DIMENSIONS: mm

TOLERANCES UNLESS OTHERWISE SPECIFIED:
0 PLC ±–
1 PLC ±–
2 PLC ±–
3 PLC ±–
4 PLC ±–
ANGLES ±–

MATERIAL: SEE NOTE
FINISH: SEE NOTE

DWN S.XU 31JAN03
CHK S.YAO 31JAN03
APVD T. SASAKI 31JAN03
PRODUCT SPEC 108–60016
APPLICATION SPEC —
WEIGHT 0.000000

TE Connectivity

NAME: POST HEADER ASS'Y VERTICAL TYPE (AMP CT CONNECTOR 2mm PITCH)

SIZE A3 | CAGE CODE 00779 | DRAWING NO C–292161 | RESTRICTED TO —

CUSTOMER DRAWING | SCALE 5:1 | SHEET 1 OF 2 | REV P1

THIS DRAWING IS UNPUBLISHED. RELEASED FOR PUBLICATION – , – .
© COPYRIGHT – By – ALL RIGHTS RESERVED.

REVISIONS

P	LTR	DESCRIPTION	DATE	DWN	APVD
	–	SEE SHEET 1	–	–	–

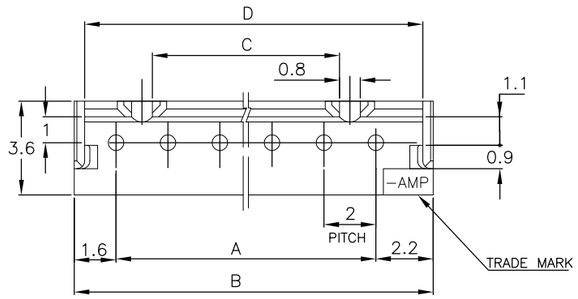

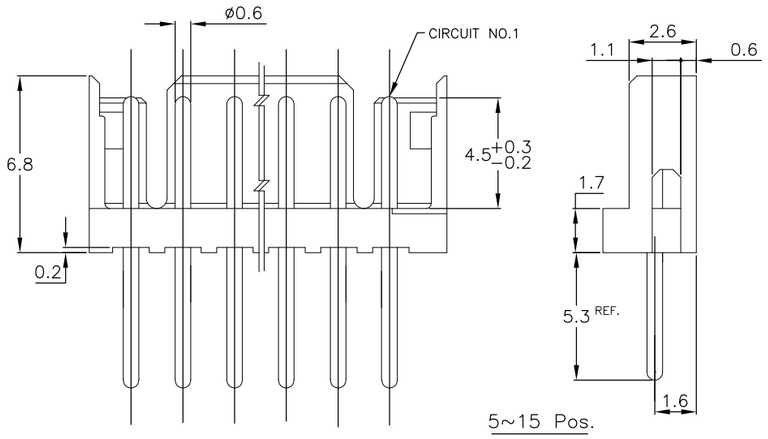

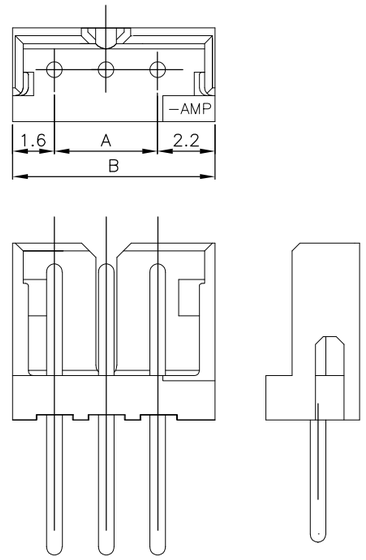

3 POS.

NOTES:

1.MATERIAL: HOUSING – NYLON 66 (UL94V–0)
POST – TIN BRASS
2.APPLICABLE RECEPTACLE P/N 173977

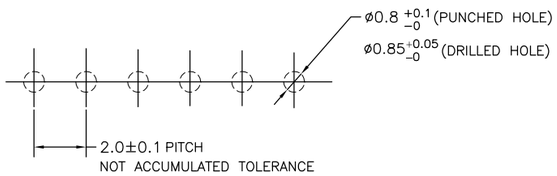

RECOMMENDABLE PCB LAYOUT
(PCB THK:0.8–1.6)

TOLERANCES UNLESS OTHERWISE SPECIFIED:

10≥ * : ±0.2
30≥ * >10 : ±0.25
100≥ * >30 : ±0.3
ANGLE : ±3°

9–292161–7	7	12	15.8	9.2	15.0
9–292161–3	3	4	7.8	—	7.0
NATURAL PART NO.	Pos.	A	B	C	D

THIS DRAWING IS A CONTROLLED DOCUMENT.

DIMENSIONS: mm

TOLERANCES UNLESS OTHERWISE SPECIFIED:
0 PLC ± –
1 PLC ± –
2 PLC ± –
3 PLC ± –
4 PLC ± –
ANGLES ± –

MATERIAL: SEE NOTE
FINISH: SEE NOTE

DWN S.XU 31JAN03
CHK S.YAO 31JAN03
APVD T. SASAKI 31JAN03
PRODUCT SPEC 108–60016
APPLICATION SPEC —
WEIGHT 0.000000

TE Connectivity

NAME: POST HEADER ASS'Y VERTICAL TYPE (AMP CT CONNECTOR 2mm PITCH)

SIZE A3 | CAGE CODE 00779 | DRAWING NO C–292161 | RESTRICTED TO —

CUSTOMER DRAWING | SCALE 5:1 | SHEET 2 OF 2 | REV P1