view shown without grounding and plastic pin

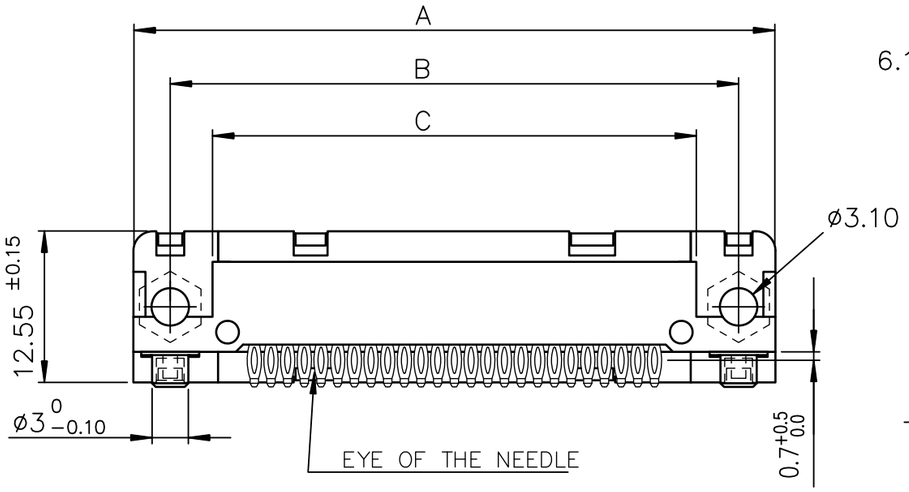

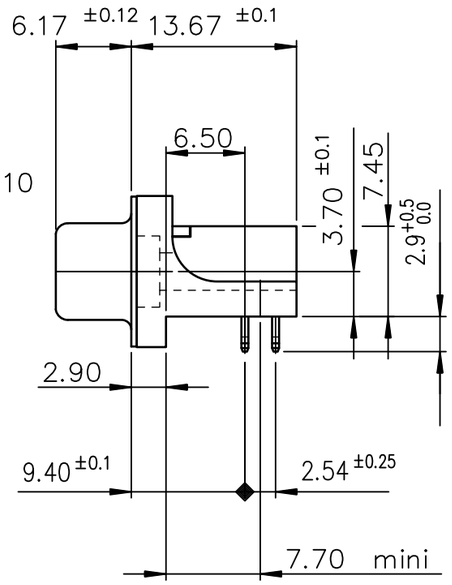

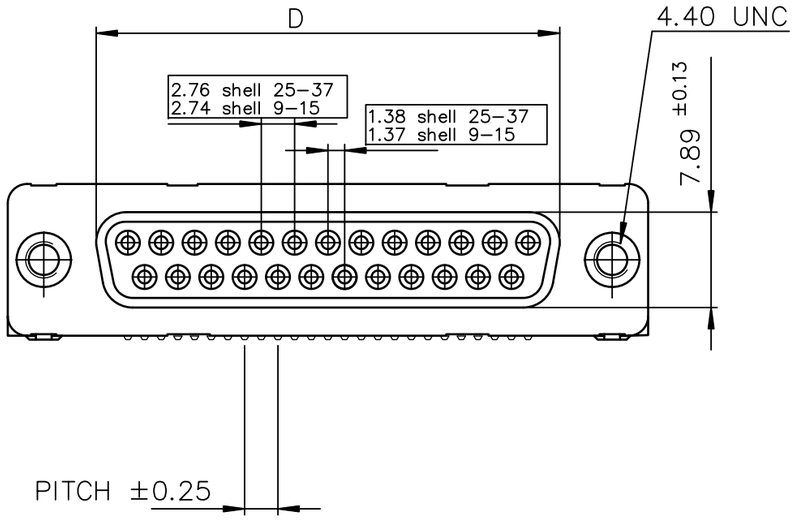

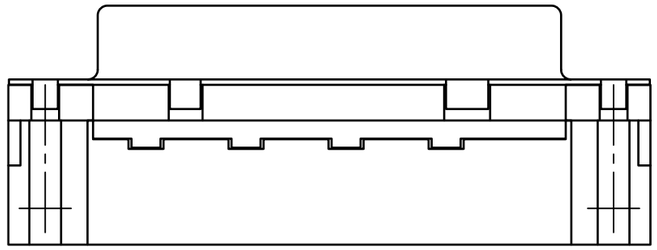

Detail of grounding strip

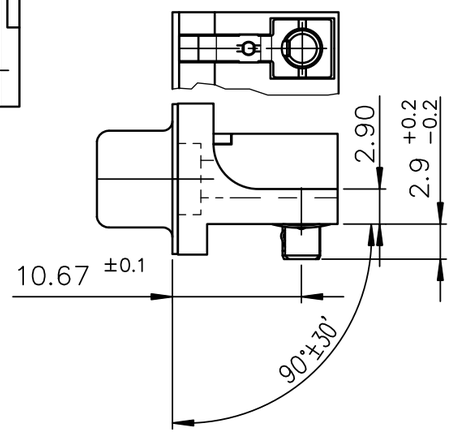

PC card drilling dimensions(after plating)
(thickness 1.60 ±0.25 mm)

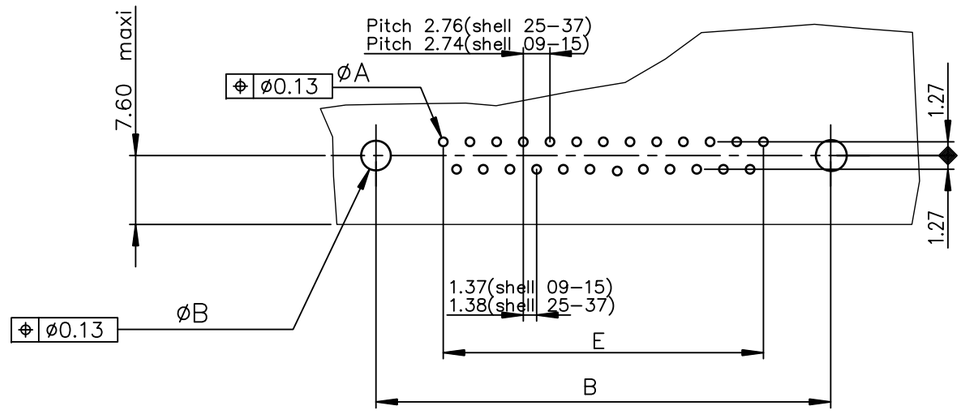

TIN LEAD PART NUMBER

SHELL	A±0.38	B±0.12	C±0.10	D±0.25 0	E±0.07	PART NUMBER	PART NUMBER
09	30.81	24.99	18.00	16.21	10.96	D09S82C4GX00	D09S82C6GX00
15	39.14	33.32	26.32	24.54	19.18	D15S82C4GX00	D15S82C6GX00
25	53.03	47.04	40.04	38.25	33.12	D25S82C4GX00	D25S82C6GX00
37	69.32	63.50	56.50	54.71	49.68	D37S82C4GX00	D37S82C6GX00
						Gold flash	0.76 µ gold

LEAD FREE PART NUMBER

SHELL	A±0.38	B±0.12	C±0.10	D±0.25 0	E±0.07	PART NUMBER	PART NUMBER
09	30.81	24.99	18.00	16.21	10.96	D09S82C4GX00LF	D09S82C6GX00LF
15	39.14	33.32	26.32	24.54	19.18	D15S82C4GX00LF	D15S82C6GX00LF
25	53.03	47.04	40.04	38.25	33.12	D25S82C4GX00LF	D25S82C6GX00LF
37	69.32	63.50	56.50	54.71	49.68	D37S82C4GX00LF	D37S82C6GX00LF
						Gold flash	0.76 µ gold

GENERAL CHARACTERISTICS AND ROHS INFORMATIONS:

SEE DRAWING C01−8646−0001

mat'l. code				surface ISO 1302		tolerance ISO 406 ISO 1101	projection
–							
ltr	ecn no	dr	date	tolerances unless otherwise specified			
L	ELX-I-18050	MP	2014/06/23	angles	linear	.0±.0.1	MM
						.00±0.1	
				0°±2°		.000±0.1	scale 2:1
				dr	PESSON	1994/10/20	
				engr	MITHUN PAUL	2014/06/23	
				chr	ALIAS BABU	2014/06/23	
				appd	BIJU K PAUL	2014/06/23	
sheet index	revision	L					
	sheet	1					

product family: D−SUB

title: FEMALE CONNECTOR DELTA-D EUROSTYLE RIGHT ANGLED PRESS FIT

dwg no: C01−8646−0319 | sheet 1 of 1 | size A3

type: Product Customer Drawing

FCIconnect.com
Copyright FCI