THIS DRAWING IS UNPUBLISHED. RELEASED FOR PUBLICATION - ,- .
© COPYRIGHT - BY TYCO ELECTRONICS CORPORATION. ALL RIGHTS RESERVED.

LOC	DIST
AA	00

REVISIONS

P	LTR	DESCRIPTION	DATE	DWN	APVD
	B	ECO-07-026027	12NOV07	LAM	PR

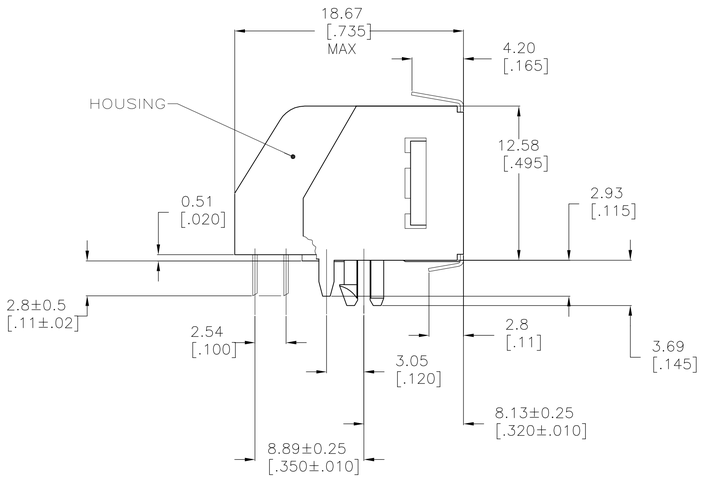

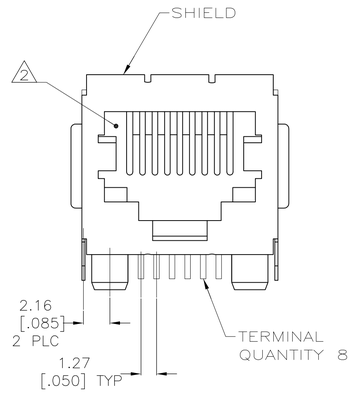

1. MATERIAL:
   HOUSING – HTN NYLON MOLDING COMPOUND, 94 VO, COLOR: BLACK
   TERMINAL – 0.36[.014] THICK PHOS-BRONZE
   PLATED WITH 1.27μm[.000050] MINIMUM THICK HARD
   GOLD IN LOCALIZED GOLD PLATE AREA AND
   3.81μm[.000150] MINIMUM THICK MATTE TIN IN
   SOLDER AREA OVER 1.27μm[.000050] THICK MINIMUM
   NICKEL UNDERPLATE.
   SHIELD – 0.25[.010] THICK COPPER ALLOY PLATED
   WITH 3.0μm[.000120] MINIMUM REFLOWED TIN

2. CAVITY CONFORMS TO FCC RULES AND REGULATIONS, PART 68, SUBPART F

3. DIMENSION MEASURED ALONG FRONT EDGES OF MATING FACE

4. PACKAGED 31 ASSEMBLIES PER TUBE WITH BOTH ENDS PLUGGED (SEE DETAIL A)

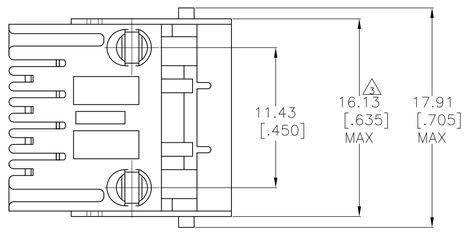

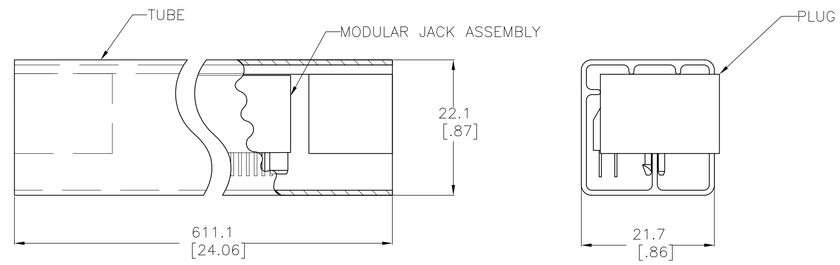

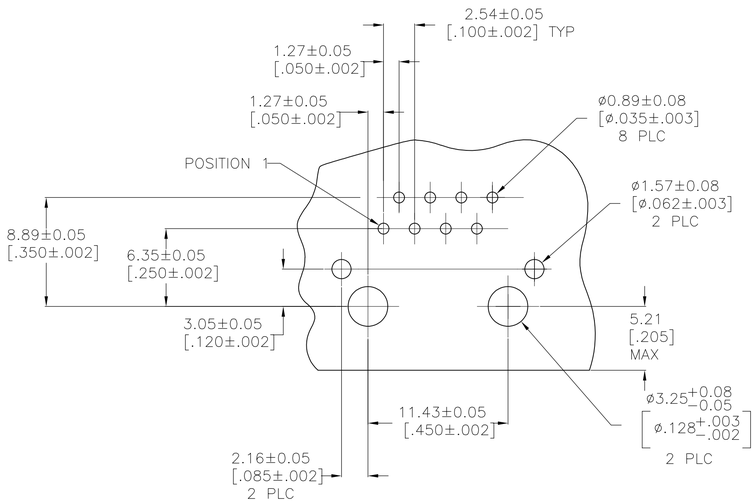

RECOMMENDED PRINTED CIRCUIT
BOARD LAYOUT
(COMPONENT SIDE)

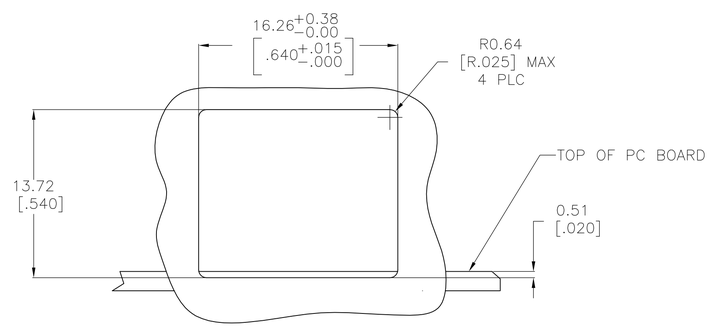

RECOMMENDED PANEL CUTOUT

5569115-1

PART NUMBER

THIS DRAWING IS A CONTROLLED DOCUMENT.	DWN L.A.MAYER 04APR2005	Tyco Electronics	Tyco Electronics Corporation Harrisburg, PA 17105-3608
DIMENSIONS: mm [INCHES]	CHK J.WESTMAN 04APR05		
TOLERANCES UNLESS OTHERWISE SPECIFIED: 0 PLC ± – ; 1 PLC ± – ; 2 PLC ± 0.13[.005] ; 3 PLC ± – ; 4 PLC ± – ; ANGLES ± –	APVD S.FLICKINGER 04APR05	NAME	MODULAR JACK ASSEMBLY, 8 POSITION, RIGHT ANGLE, LOW PROFILE, SHIELDED, PANEL GROUND
	PRODUCT SPEC 108-1163		
	APPLICATION SPEC 114-2048	SIZE A1 / CAGE CODE 00779 / DRAWING NO C-5569115	RESTRICTED TO –
MATERIAL SEE NOTE 1	FINISH SEE NOTE 1	WEIGHT –	
	CUSTOMER DRAWING	SCALE 4:1 / SHEET 1 OF 1	REV B