UNIT:mm

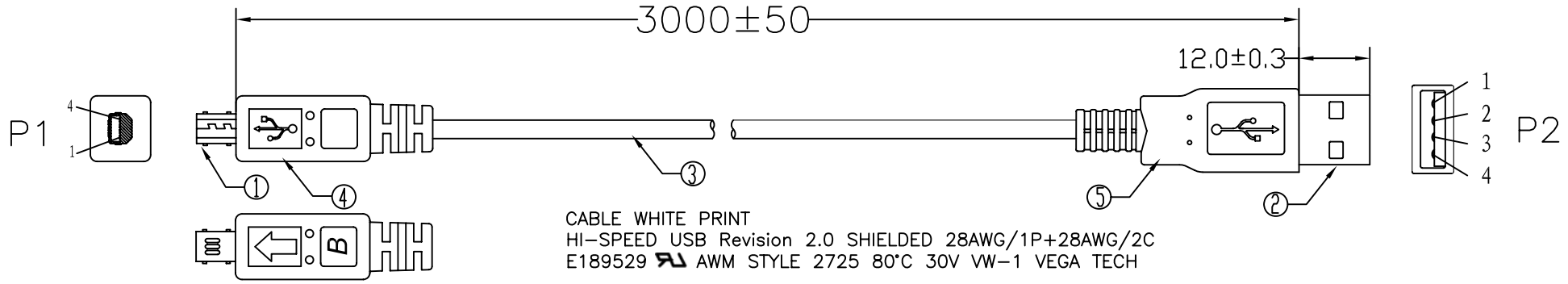

CABLE WHITE PRINT
HI-SPEED USB Revision 2.0 SHIELDED 28AWG/1P+28AWG/2C
E189529 AWM STYLE 2725 80°C 30V VW-1 VEGA TECH

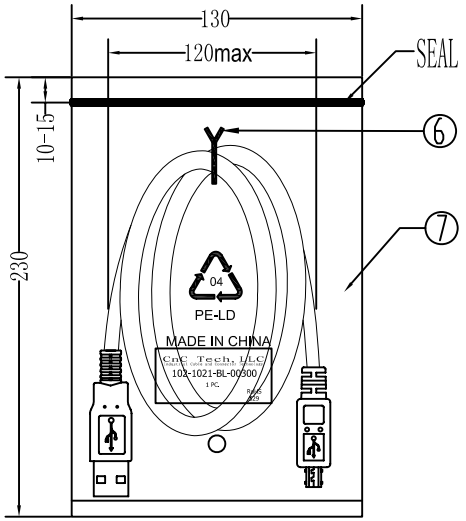

1PC/PE BAG

PIN ASSIGNMENT:

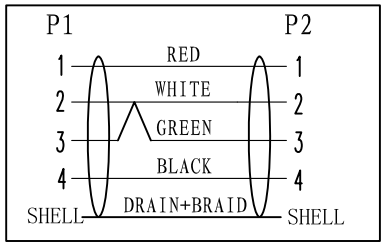

Electrical test:
1.100% short,open,miswire test
2.Conduct resistance:2 Ohm(max)
3.Insulation resistance:10Mohm(min)
4.dielectric test:DC 300V

NO.	NAME	Q'TY	SPECIFICATION
⑧	PE BAG	1/10	CLEAR SIZE: 280*330*0.05mm PRINT BLACK"MADE IN CHINA"+"10PCS"
⑦	PE BAG	1	CLEAR SIZE: 130*230*0.05mm PRINT BLACK"MADE IN CHINA"
⑥	TIE	1	BLACK L=120mm
⑤	OUT JACKET	6g	BLACK PVC-40P (MOULD NO:WM-40)
④	OUT JACKET	6g	BLACK PVC-40P
③	CABLE	1	BLACK USB2.0 UL2725 28#/1P+28#/2C+AEB OD:3.8mm L=3000±15mm
②	CONN	1set	USB A MALE SHELL:NICKEL PIN:G/F 4PCS TYPE INSULATOR COLOR:WHITE
①	CONN	1set	MINI USB 4P B/M PLUG SOLDER TYPE PLASTIC BLACK

CnC Tech, LLC

Industrial Cable and Connector Technology

DRAWED	ZHONGHS	DRAWING NO	
CHECKED		CUSTOMER	
APPROVAL		ITEM NO.	102-1021-BL-00300
DECIDED		DATE	2012-02-17
VERSIONS/EDITEON	A/0	PROJECTION	