TL-190 Adjustable Grip Latch Tool Operated

■Characteristic

This simple latch utilizes a hexagonal wrench key.

■Application

Machine tools / Distribution panels

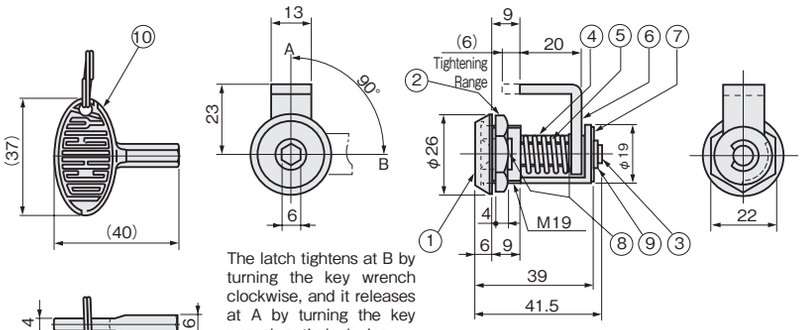

The latch tightens at B by turning the key wrench clockwise, and it releases at A by turning the key wrench anti clockwise.

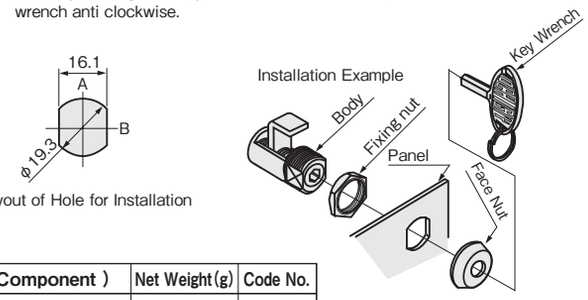

Layout of Hole for Installation

■Parts List

No.	Part Name	Material	Finish	Quantity
1	Face Nut	C3604	Cr	1
2	Fixing Nut	ZDC	Zn	1
3	Main Shaft	S20C	Cr	1
4	Body	C3604	Ni	1
5	Spring	SUS304	—	1
6	Latch	SPCC	Zn	1
7	Guide	C3604	Ni	1
8	Washer	PA	Primary Color	2
9	E-Shaped Snap Ring	SUS304	—	1
10	Key Wrench	ZDC	Ni	1

※The Key Wrench is sold separately.

Model No.	Name (Component)	Net Weight (g)	Code No.
TL-190-1	Wrench Stopper	72.9	1170
TL-193-2	Key Wrench	16.4	1150
TL-190-001	Wrench Stopper, Key Wrench	89.3	1470

TL-193 Cam Lock Tool Operated

■Characteristic

A simple lock utilizes with a hexagonal wrench.

■Application

Machine tools / Distribution panels

■Specification

Recommended fixing torque [Fixing Nut] 3.9N-m (40kgf-cm)
[Hexagon Nut] 2.0N-m (20kgf-cm)

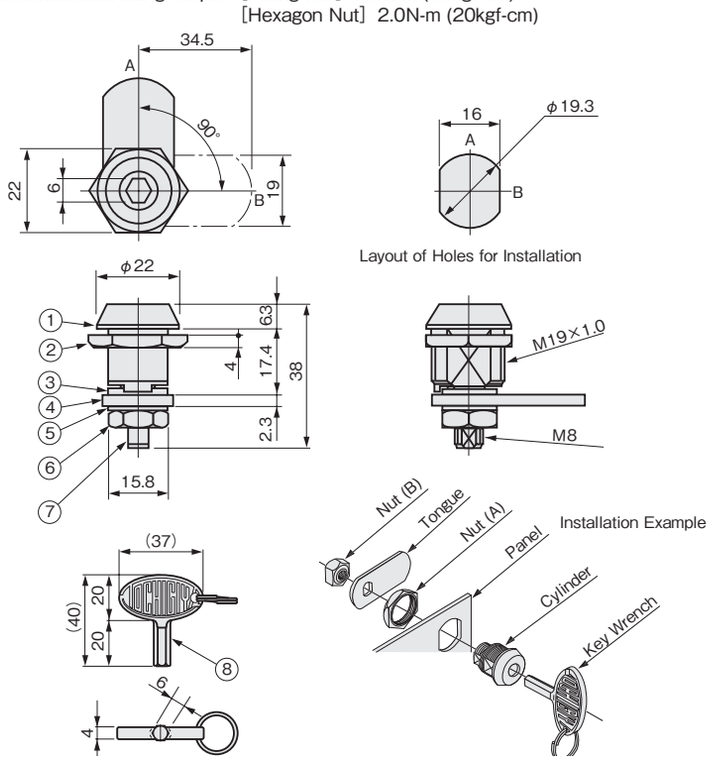

Layout of Holes for Installation

Model No.	Name	Component	Net Weight (g)	Code No.
TL-193-1	Wrench Lock	Lock and Wrench	69.4	1126
TL-193-2	Key Wrench	Key Wrench	16.4	1150
TL-193-001	Set	Lock and Wrench, Key Wrench	85.8	1826

■Parts List

No.	Part Name	Material	Finish	Quantity
1	Cylinder	C3604	Cr	1
2	Nut (A)	ZDC	Zn	1
3	Cam	SPCC		1
4	Tongue			1
5	Washer	SUS304	—	1
6	Nut (B)	S	Zn	1
7	Shaft	ZDC	Cr	1
8	Key Wrench		Ni	1

※The Key Wrench is sold separately.