THIS DRAWING IS UNPUBLISHED. RELEASED FOR PUBLICATION -,- .
© COPYRIGHT - BY TYCO ELECTRONICS CORPORATION. ALL RIGHTS RESERVED.

PART NUMBER	REV	FIRST USED
1852152-1	B	122500-1
1852152-2	B	565435-5
1852152-3	B	354500-1
1852152-6	B	-
7-1852152-7	B	-

-1	LEADMAKER	AIRFEED
-2	BENCH MODEL K	AIRFEED
-3	BENCH MODEL G	AIRFEED
-4	LEADMAKER	AIRFEED
-77	SPARE PART KIT	

LOC	DIST
A	66

REVISIONS

P	LTR	DESCRIPTION	DATE	DWN	APVD
	B1	ECR-07-017072	7-2007	MY	GB

1. RECOMMENDED SPARE PARTS.
2. GREASE LIGHTLY.
3. GUARD MUST BE IN PLACE WHEN OPERATING APPLICATOR IN A BENCH MACHINE.
4. SEE DRAWING FOR COMPONENTS
5. THIS APPLICATOR APPLIES TERMINAL WITH A SEAL.
6. APPLY TORQ-SEAL IN ALLEN SOCKET TO FILL HOLE AFTER FLAT HD HAS BEEN ADJUSTED TO CORRECT HEIGHT AT QUALIFICATION. APPLY PN 1-23419-5 LOC-TITE TO THREADS.

TERMINAL NAME: TAXI TERM M M/P 630 SLD (5)

AMP TERM PN	MFR TERM PN
1572844	12064735

PACKARD TERMINAL PACKARD CRIMP SPECS

PAD LTR	CRIMP HEIGHT	WIRE SIZE
A	.065 ±.002 [1.65 ±0.05mm]	14 AWG
B	.057 ±.002 [1.45 ±0.05mm]	16 AWG
C	NOT	USED
D	NOT	USED

AMP SEAL PN	MFR SEAL PN	CRIMP	SIZE	TYPE	RANGE
1572813.	12052388	WIRE	.116 [2.95mm]	F	14-16 AWG
		INSUL	.244 [6.20mm]	0	.079-.141

WIRE STRIP LENGTH	TERM APPL SPEC	FEED	APPL INSTRUCTION	SET UP GAGE	LAYOUT
.200-.230	NONE	.800	408-8040	458637-1	L1852152

-77	-6	-3	-2	-1	U/M	PART NO	DESCRIPTION	ITEM NO
								129
								128
-	2	2	2	2	-	2-354779-3	PIN, WIRE DISC (.3105)B	127
-	2	2	2	2	-	354779-8	PIN, WIRE DISC (.3030)A	126
-	1	1	1	1	-	986950-1	WASHER, FLAT PRECISION	125
-	1	1	1	1	-	217238-1	GENERAL INSTRUCTION PACKAGE	124
-	1	1	1	1	-	4088040	SF APPL INST 408-8040	123
								122
								121
								120
								119
								118
-	3	3	3	3	-	21024-5	WASHER, LOCK(#10)ADJ BLOCK	117
								116
								115
-	2	2	2	2	-	21024-2	WASHER,LOCK(#4)FRONT STP GUIDE	114
								113
								112
-	4	4	4	4	-	21024-4	WASHER,LOCK(#8)STRIPPER	111
								110
								109
-	1	1	1	1	-	21018-5	NUT,HEX(NO.6)HOLDDOWN	108
								107
								106
-	1	1	1	1	-	22353-8	SCR,SHLD(Ø.187x.25)DRAG LEVER	105
								104
-	1	1	1	1	-	21009-2	SCR,SKT SET(1/4-20x.25 LW)RAM	103
-	2	2	2	2	-	21017-2	SCR,DRIVE(#2x.19)ID PLATE	102
								101
-	1	1	1	1	-	461264-1	PLATE, IDENTIFICATION	100
-	2	2	2	2	-	5-21006-6	SCR,SET(10-32x.75)DRAG	99
-	1	1	1	1	-	22733-8	SCR,BHC(8-32x.38 LW)ANVIL	98
-	4	4	4	4	-	2-21002-9	SCR,BHC(10-32x.75)CAP	97
-	3	3	3	3	-	2-22733-8	SCR,BHC(1/4-20x.62)HSG	96
-	1	1	1	1	-	2-21002-7	SCR,BHC(10-32x.50)SG ADJ BLK	95
-	4	4	4	4	-	2-21002-2	SCR,BHC(8-32x.50)TERM H DWN	94
-	2	2	2	2	-	2-21002-2	SCR,BHC(8-32x.5)R STP GDE	93
-	1	1	1	1	-	2-21003-1	SCR,FHC(6-32x.63)DEP	92
								91
-	1	1	1	1	-	461690-1	SPACER, AIR FEED	90
								89
-	2	2	2	2	-	1-21000-8	SCR,SHC(6-32x.25)DEP-HOLD	88
-	2	2	2	2	-	3-21000-2	SCR,SHC(8-32x1.125)DEP-HOLD	87
-	1	1	1	1	-	2-22603-1	SCR,HEX HD(8-32x.38)FEED FINGER	86
-	2	2	2	2	-	1-21000-5	SCR,SHC(4-40x.50)FR ST GUIDE	85
-	1	1	1	1	-	2-21000-7	SCR,SHC(8-32x.50)STRIPPER	84
								83
								82
-	1	1	1	1	-	3-21000-4	SCR,SHC(10-32x.38)SG ADJ BL	81
								80
(3) -	-	-	1	-	-	462992-7	GUARD ASSY	79
-	-	REF	-	-	-	679532-1	INSERT, GUARD	78
								77
								76
								75
-	1	1	1	1	-	690603-1	SPRING, ASSIST	74
-	1	1	1	1	-	23030-1	SCR,SHC(6-32x.25 SL)INS DISC	73
-	1	1	1	1	-	3-21001-5	SCR,SHC(3/8-16X1.00)AIR FEED	72
-	1	1	1	1	-	459610-3	MOUNT, FEED BRACKET	71

QTY REQD PER ASSY — PARTS LIST

-77	-6	-3	-2	-1	U/M	PART NO	DESCRIPTION	ITEM NO
-	1	1	1	1	-	21024-8	WASHER, LOCK 3/8	70
(4) -	-	-	1	-	-	692655-5	AIR FEED VALVE ASSY	69
								68
-	-	-	REF	-	-	24042-2	VALVE, SHUT OFF	67
(4) -	-	-	REF	-	-	692655-6	AIR FEED VALVE ASSY	66
-	1	1	1	1	-	461065-2	AIR FEED ASSY (1 INCH)	65
-	2	2	2	2	-	4-21000-3	SCR,SHC(10-32x.75)AIR ASSY	64
								63
								62
								61
-	1	1	-	1	-	692655-7	AIR FEED VALVE ASSY	60
-	1	1	1	1	-	454220-1	CAP, RAM	59
-	1	1	1	1	-	454485-1	HOUSING	58
								57
-	1	1	1	1	-	458537-2	PAWL, FEED	56
								55
								54
(4) -	1	1	1	1	-	461062-1	FEED FINGER ASSY	53
								52
-	1	1	1	1	-	811242-2	BUMPER, HOLDDOWN	51
-	1	1	1	1	-	690753-1	SPACER, TONKER	50
								49
								48
								47
								46
-	1	1	1	1	-	690191-1	PLUG, NYLON	45
-	1	1	1	1	-	455673-1	RAM	44
-	1	1	1	1	-	690125-1	WASHER, LAMINATED	43
-	1	1	1	1	-	690124-3	WASHER, RAM	42
-	1	1	1	1	-	7-21002-9	BOLT, CRIMPER(5/16x1.00)	41
-	1	1	1	1	-	23241-6	BALL, STEEL	40
-	1	1	1	1	-	690170-1	SPRING, COMPRESSION	39
-	1	1	1	1	-	1-690142-2	DISC, INSULATION	38
-	1	1	1	1	-	354777-1	DISC, WIRE	37
-	1	1	1	1	-	22480-5	WASHER, SPRING	36
-	1	1	1	1	-	690212-1	POST, RAM	35
								34
-	1	1	1	1	-	318055-5	PLATE, BASE	33
-	1	1	1	1	-	690432-3	SCREW, ADJUSTMENT	32
								31
-	1	1	1	1	-	455689-1	BLOCK, STRIP GUIDE ADJ	30
-	1	1	1	1	-	1633087-9	PLATE, STRIP GUIDE	29
-	1	1	1	1	-	455888-6	SPACER, FRONT SHEAR DEP	28
-	2	2	2	2	-	1-22284-0	SPRING, DRAG	27
-	1	1	1	1	-	356835-1	LEVER, DRAG RELEASE	26
-	1	1	1	1	-	240792-1	DRAG, TERMINAL	25
								24
-	1	1	1	1	-	1490899-6	GUIDE, STRIP (FRONT)	23
-	1	-	-	1	-	690472-2	STRIPPER	22
-	-	1	1	1	-	1-22281-8	SPRING, STRIP GUIDE	21
								20
-	-	1	1	-	-	691353-1	STRIPPER	19
-	1	1	1	1	-	3-240641-3	SPACER, DEPRESSOR (REAR)	18
-	1	-	-	-	-	679625-1	SHEAR, HOLDER (FRONT)	17
(1) -	1	1	1	1	-	318563-1	GUARD, CHIP, FRONT	16
-	1	1	1	1	-	1-690464-8	PLATE, SHEAR (REAR)	15
-	1	1	1	1	-	690462-1	HOLDER, SHEAR (REAR)	14
(1) -	1	1	1	1	-	690463-1	SHEAR, FLOAT (REAR)	13
-	2	2	2	2	-	3-22280-3	SPRING, SHEAR	12
-	2	2	2	2	-	690461-1	STOP, SHEAR	11
-	-	1	1	1	-	1-690459-7	HOLDER, SHEAR (FRONT)	10
(1) -	1	1	1	1	-	318059-1	SHEAR, FLOAT (FRONT)	9
1	1	1	1	1	-	4-1633116-3	ANVIL	8
-	1	1	1	1	-	2-240641-6	SPACER, DEPRESSOR (REAR)	7
-	1	1	1	1	-	1-690468-5	DEPRESSOR, SHEAR (REAR)	6
-	1	1	1	1	-	122399-6	DEPRESSOR, SHEAR (FRONT)	5
-	1	1	1	1	-	3-238011-1	SPACER, BLOCK CRIMPER	4
(1) 1	1	1	1	1	-	5-1583690-8	CRIMPER, INSULATION	3
-	1	1	1	1	-	1-455888-1	SPACER, CRIMPER	2
(1) 1	1	1	1	1	-	3-1633305-7	CRIMPER, WIRE	1

QTY REQD PER ASSY — PARTS LIST

THIS DRAWING IS A CONTROLLED DOCUMENT.

DIMENSIONS: INCHES

TOLERANCES UNLESS OTHERWISE SPECIFIED:
0 PLC ± -
1 PLC ± -
2 PLC ± .25
3 PLC ± -
4 PLC ± -
ANGLES ± -

MATERIAL -
FINISH -

DWN C.REICHELDERFER 08MAR06
CHK -
APVD T.FLRIN 08MAR06
PRODUCT SPEC -
APPLICATION SPEC -
WEIGHT -

Tyco Electronics
Tyco Electronics Corporation
Harrisburg, PA 17105-3608

NAME SIDE FEED HDM APPLICATOR

SIZE	CAGE CODE	DRAWING NO	RESTRICTED TO
A1	00779	C-1852152	-

CUSTOMER DRAWING SCALE - SHEET 1 OF 2 REV B1

THIS DRAWING IS UNPUBLISHED. RELEASED FOR PUBLICATION -.- .
© COPYRIGHT - BY TYCO ELECTRONICS CORPORATION. ALL RIGHTS RESERVED.

LOC	DIST
A	66

REVISIONS

P	LTR	DESCRIPTION	DATE	DWN	APVD
	—	SEE SHEET 1	—	—	—

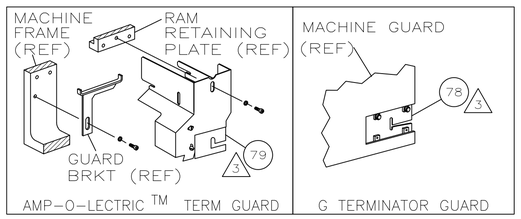

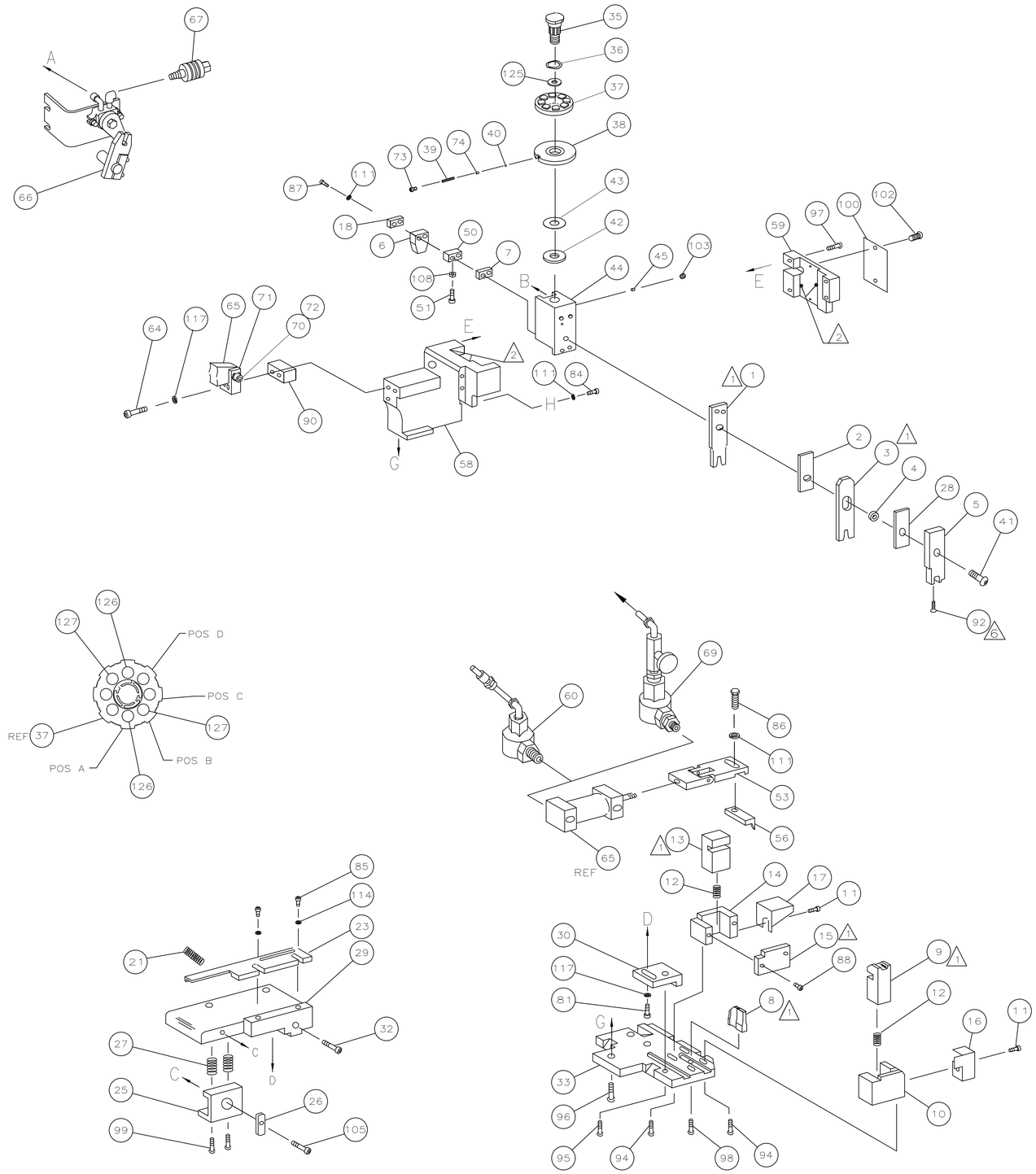

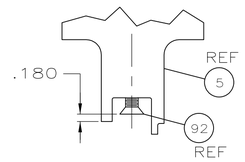

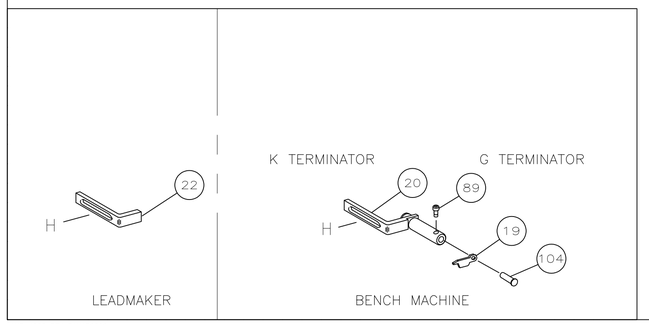

THIS DRAWING IS A CONTROLLED DOCUMENT.

DIMENSIONS: INCHES

TOLERANCES UNLESS OTHERWISE SPECIFIED:
0 PLC ± –
1 PLC ± –
2 PLC ± .25
3 PLC ± –
4 PLC ± –
ANGLES ± –

MATERIAL –
FINISH –

DWN C.REICHELDERFER OBMAR06
CHK –
APVD T.ELBIN OBMAR06
PRODUCT SPEC —
APPLICATION SPEC —
WEIGHT —

Tyco Electronics
Tyco Electronics Corporation
Harrisburg, PA 17105-3608

NAME SIDE FEED HDM APPLICATOR
—

SIZE	CAGE CODE	DRAWING NO	RESTRICTED TO
A1	00779	C-1852152	—

CUSTOMER DRAWING | SCALE — | SHEET 2 OF 2 | REV B1