Features/Benefits

- ***Broad range of products***
- ***Various circuit design, SPDT, 4P3T, vertical, right angle***
- ***Compact miniature slide switch***
- ***Shorting or non-shorting***
- ***Custom design available***

Typical Applications

- ***Consumer electronics***
- ***Computer peripherals***
- ***Telecommunication***
- ***Audio & visual equipment***
- ***Medical***
- ***Automotive***

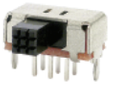

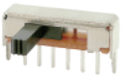

SK-13D21-G 2RT 1P3T NON-SHORTING

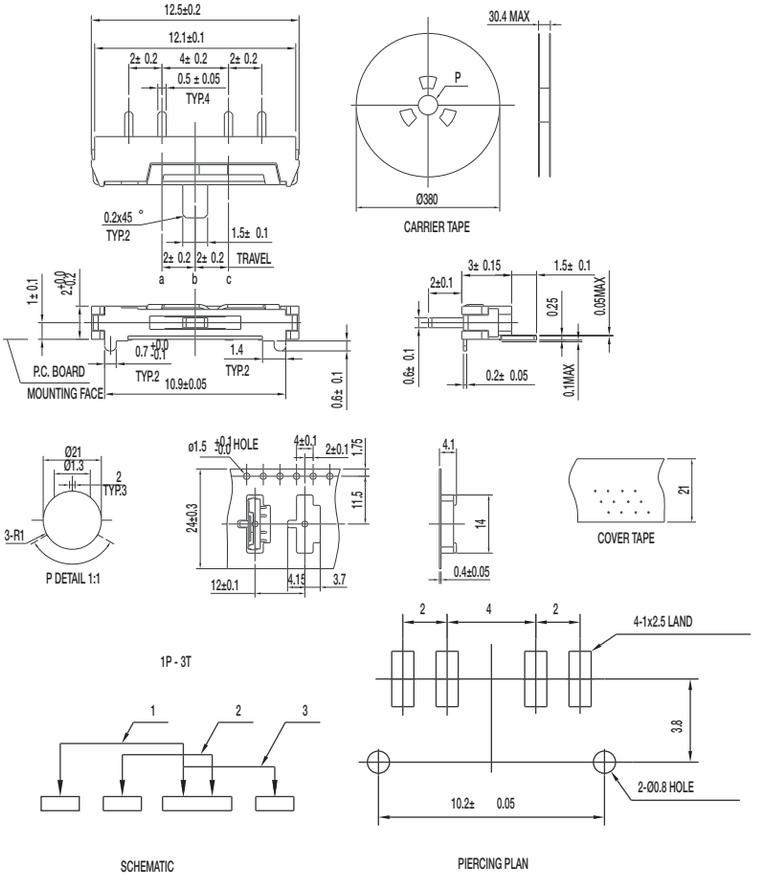

Specifications

CONTACT RATING: 0.3A @ 4 VDC

INITIAL CONTACT RESISTANCE: 70 m ohms max.

INSULATION RESISTANCE: 100 M ohms min.

DIELECTRIC STRENGTH: 500 V AC (50-60 Hz) between open terminals and between the frame and terminal.

OPERATING LIFE: 10,000 cycles with load

OPERATING FORCE: 125 ± 50 gf (1.23 ± 0.49N)
200 ± 50 gf (1.96 ± 0.49N)

TRAVEL: 2 ± 0.3 mm

OPERATING TEMPERATURE: -20˚C to 70˚C

Materials

HOUSE: LCP (UL 94V-0)

KNOB: PA (UL 94V-0)

FRAME: SUS

CONTACT: Silver clad

TERMINAL: Silver plated

SK-22D01-SG NS DPDT NON-SHORTING

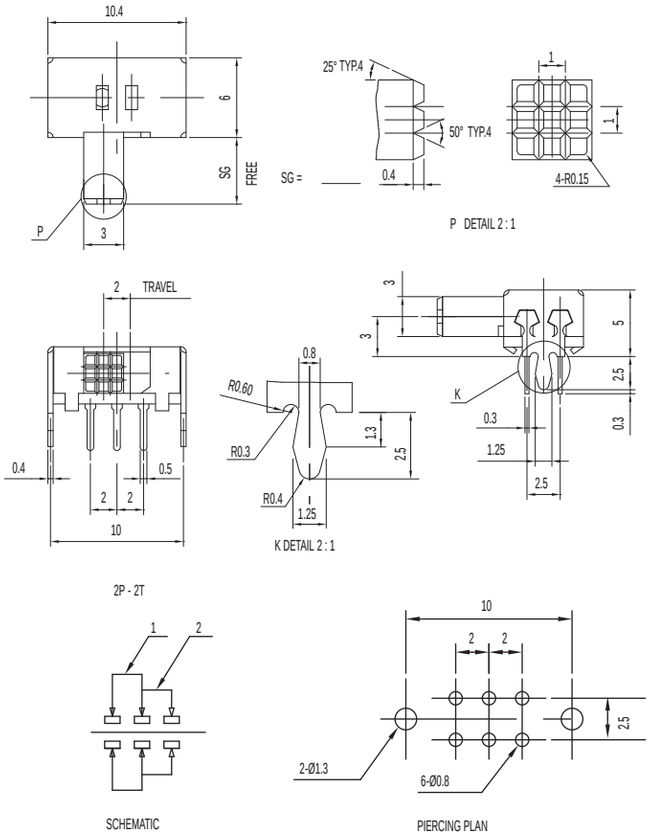

Specifications

CONTACT RATING: 0.3A @ 30 VDC
INITIAL CONTACT RESISTANCE: 30 m ohms max.
INSULATION RESISTANCE: 100 M ohms min.
DIELECTRIC STRENGTH: 500 V AC (50-60 Hz) between open terminals and between the frame and terminal.
OPERATING LIFE: 10,000 cycles with load
OPERATING FORCE: 250 ± 100 gf (2.45 ± 0.98N)
TRAVEL: 2 ± 0.3 mm
OPERATING TEMPERATURE: -20˚C to 70˚C

Materials

KNOB: POM
FRAME: SPCC
CONTACT: Silver clad
TERMINAL: Silver plated

SK-22D05-G NS DPDT NON-SHORTING

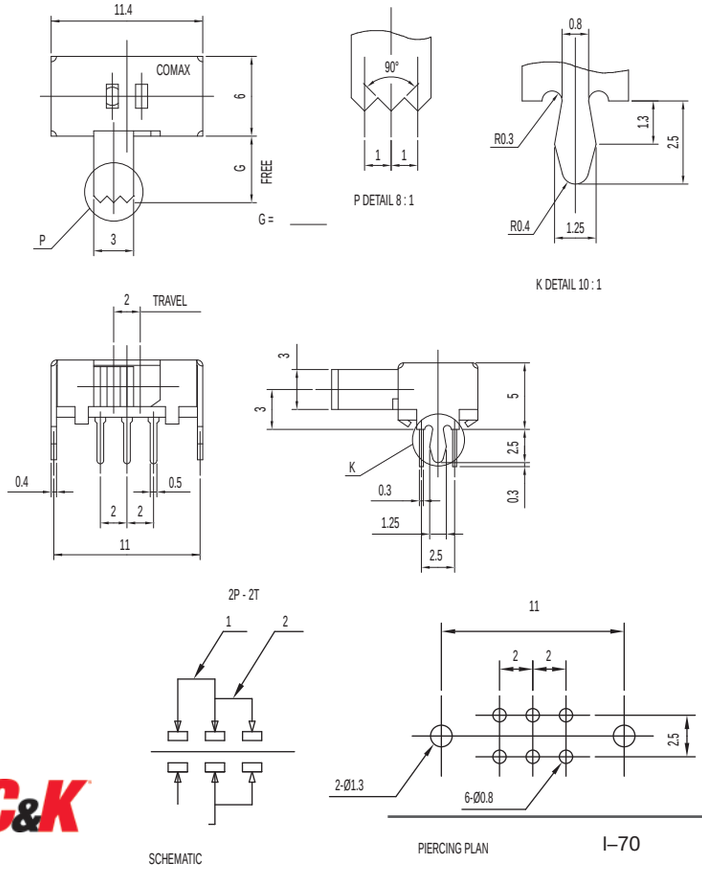

Specifications

CONTACT RATING: 0.3A @ 30 VDC
INITIAL CONTACT RESISTANCE: 30 m ohms max.
INSULATION RESISTANCE: 100 M ohms min.
DIELECTRIC STRENGTH: 500 V AC (50-60 Hz) between open terminals and between the frame and terminal.
OPERATING LIFE: 10,000 cycles with load
OPERATING FORCE: 250 ± 100 gf (2.45 ± 0.98N)
TRAVEL: 2 ± 0.3 mm
OPERATING TEMPERATURE: -20˚C to 70˚C

Materials

KNOB: POM
FRAME: SPCC
CONTACT: Silver clad
TERMINAL: Silver plated

Dimensions are shown:mm
Specifications and dimensions subject to change

SK-22D06-G NS DPDT NON-SHORTING

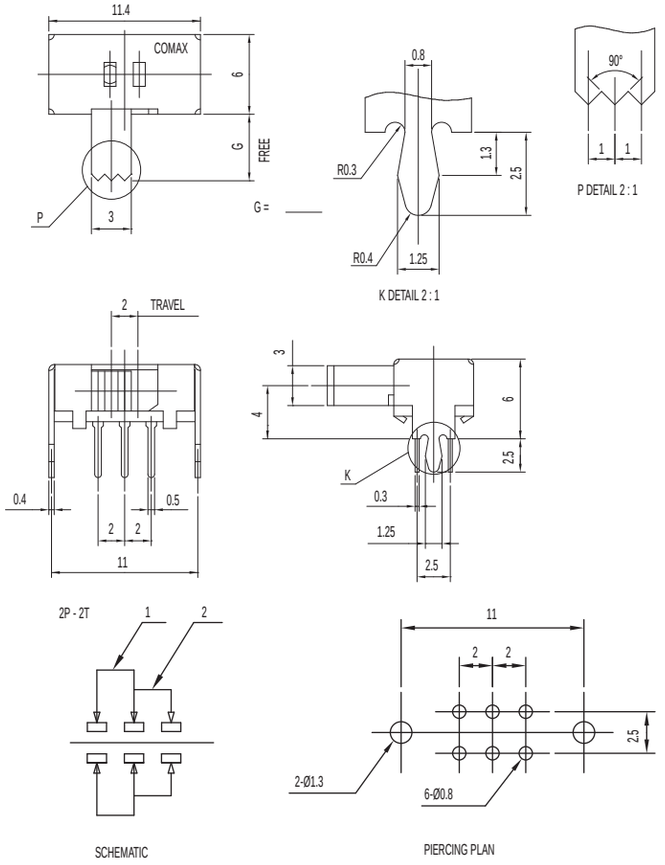

Specifications

CONTACT RATING: 0.3A @ 30 VDC

INITIAL CONTACT RESISTANCE: 30 m ohms max.

INSULATION RESISTANCE: 100 M ohms min.

DIELECTRIC STRENGTH: 500 V AC (50-60 Hz) between open terminals and between the frame and terminal.

OPERATING LIFE: 10,000 cycles with load

OPERATING FORCE: 250 ± 100 gf (2.45 ± 0.98N)

TRAVEL: 2 ± 0.3 mm

OPERATING TEMPERATURE: -20˚C to 70˚C

Materials

KNOB: POM

FRAME: SPCC

CONTACT: Silver clad

TERMINAL: Silver plated

SK-22H06-SG DPDT NON-SHORTING

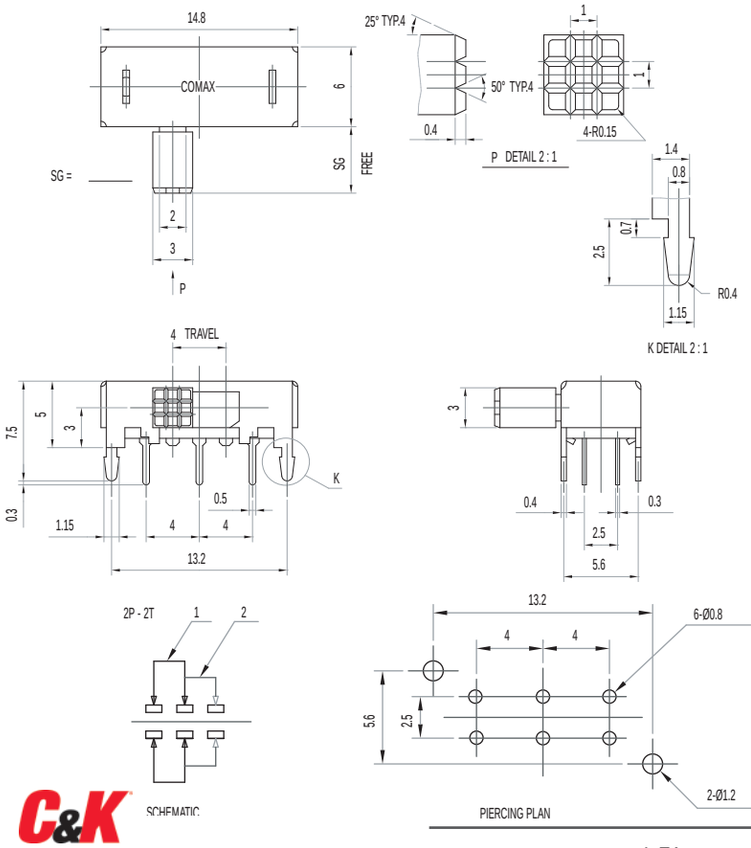

Specifications

CONTACT RATING: 0.3A @ 30 VDC

INITIAL CONTACT RESISTANCE: 30 m ohms max.

INSULATION RESISTANCE: 100 M ohms min.

DIELECTRIC STRENGTH: 500 V AC (50-60 Hz) between open terminals and between the frame and terminal.

OPERATING LIFE: 10,000 cycles with load

OPERATING FORCE: 200 ± 100 gf (1.96 ± 0.98N)

TRAVEL: 4 ± 0.3 mm

OPERATING TEMPERATURE: -20˚C to 70˚C

Materials

KNOB: POM

FRAME: SPCC

CONTACT: Silver clad

TERMINAL: Silver plated

Dimensions are shown: mm
Specifications and dimensions subject to change

SK Series
Miniature Slide Switches

SK-23D05-G 2P3T

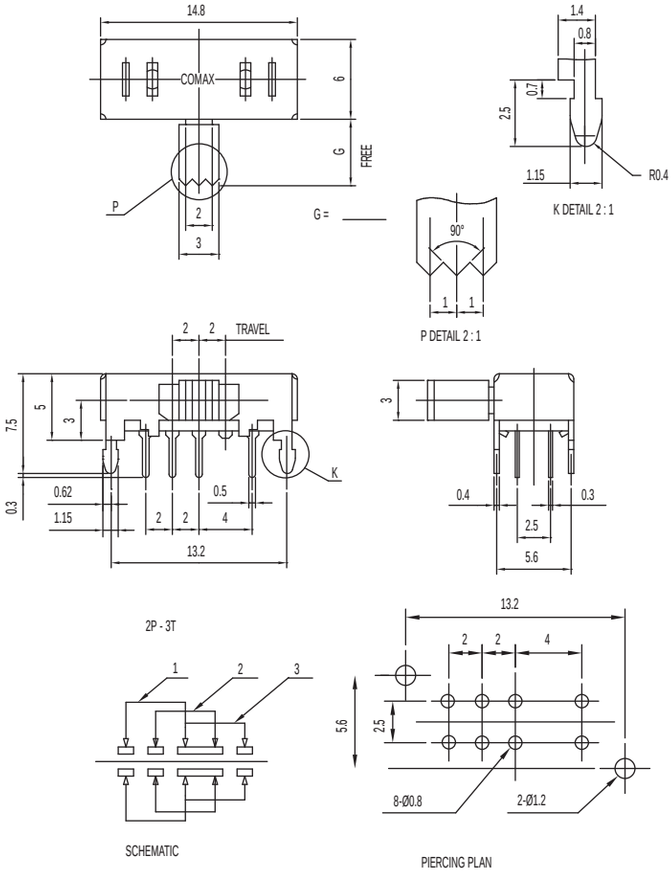

Specifications

CONTACT RATING: 0.3A @ 30 VDC

INITIAL CONTACT RESISTANCE: 30 m ohms max.

INSULATION RESISTANCE: 100 M ohms min.

DIELECTRIC STRENGTH: 500 V AC (50-60 Hz) between open terminals and between the frame and terminal.

OPERATING LIFE: 10,000 cycles with load

OPERATING FORCE: 200 ± 100 gf (1.96 ± 0.98N)
250 ± 100 gf (2.45 ± 0.98N)

TRAVEL: 2 ± 0.3 mm

OPERATING TEMPERATURE: -20˚C to 70˚C

Materials

KNOB: POM

FRAME: SPCC

CONTACT: Silver clad

TERMINAL: Silver plated

SK-42D05-SG NS 4P2T NON-SHORTING

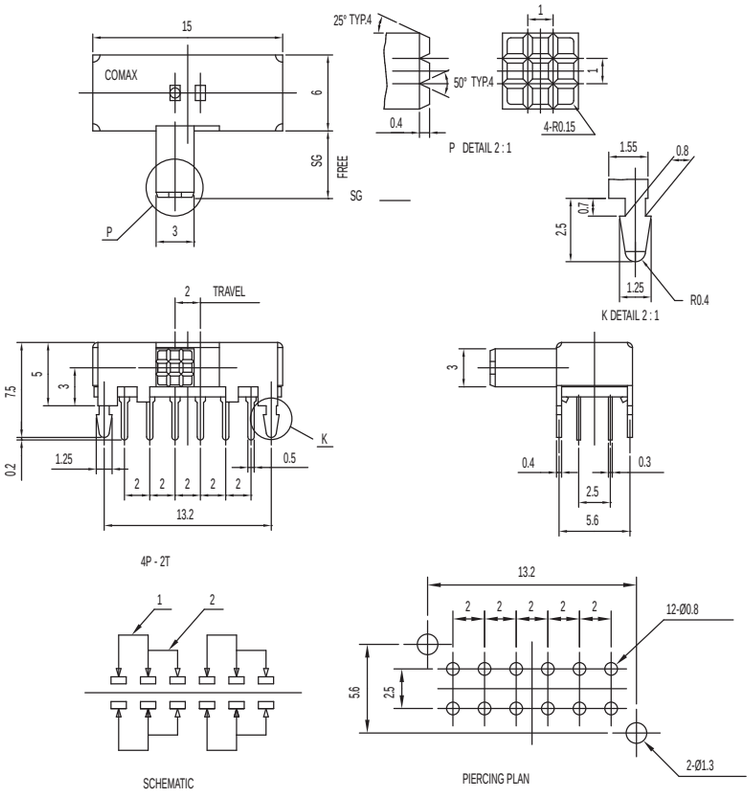

Specifications

CONTACT RATING: 0.3A @ 30 VDC

INITIAL CONTACT RESISTANCE: 30 m ohms max.

INSULATION RESISTANCE: 100 M ohms min.

DIELECTRIC STRENGTH: 500 V AC (50-60 Hz) between open terminals and between the frame and terminal.

OPERATING LIFE: 10,000 cycles with load

OPERATING FORCE: 250 ± 100 gf (2.45 ± 0.98N)

TRAVEL: 2 ± 0.3 mm

OPERATING TEMPERATURE: -20˚C to 70˚C

Materials

KNOB: POM

FRAME: SPCC

CONTACT: Silver clad

TERMINAL: Silver plated

Dimensions are shown: mm
Specifications and dimensions subject to change

SK-43D05-SG 4P3T

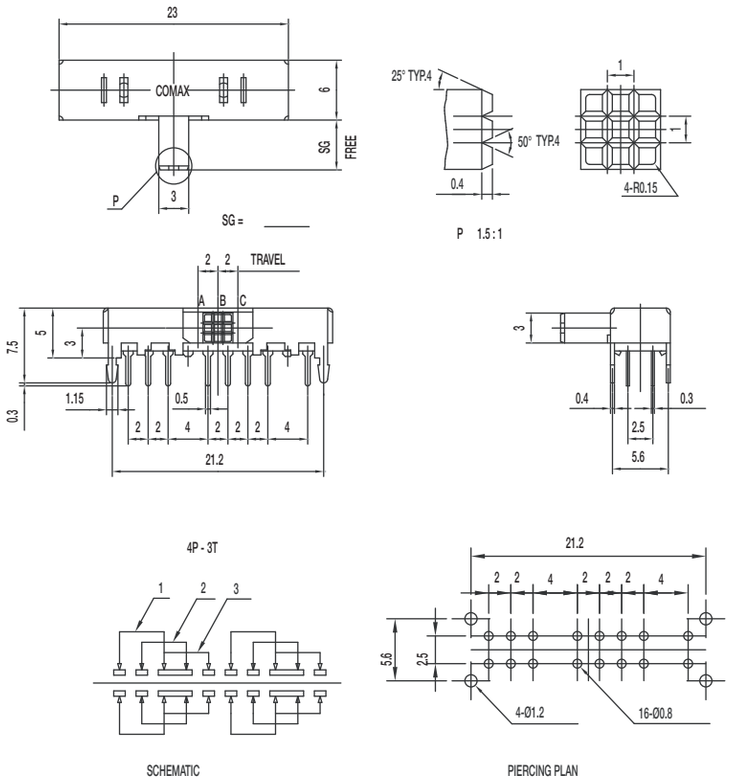

Specifications

CONTACT RATING: 0.3A @ 30 VDC

INITIAL CONTACT RESISTANCE: 30 m ohms max.

INSULATION RESISTANCE: 100 M ohms min.

DIELECTRIC STRENGTH: 500 V AC (50-60 Hz) between open terminals and between the frame and terminal.

OPERATING LIFE: 10,000 cycles with load

OPERATING FORCE: 200 ± 100 gf (1.96 ± 0.98N)
300 ± 100 gf (2.94 ± 0.98N)

TRAVEL: 2 ± 0.3 mm

OPERATING TEMPERATURE: -20˚C to 70˚C

Materials

KNOB: POM

FRAME: SPCC

CONTACT: Silver clad

TERMINAL: Silver plated

SK-42H03-G 4P2T NON-SHORTING

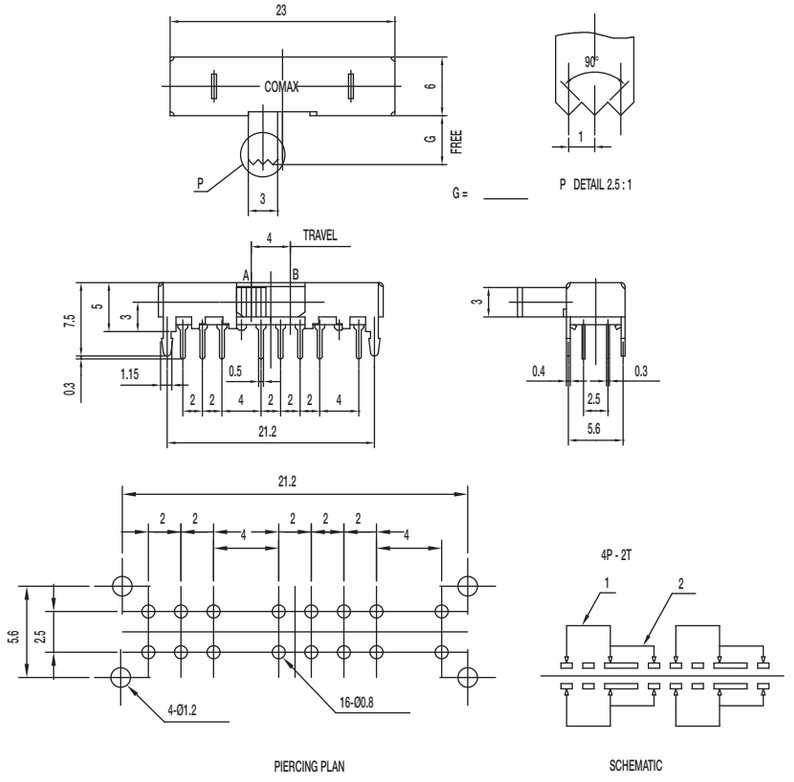

Specifications

CONTACT RATING: 0.3A @ 30 VDC

INITIAL CONTACT RESISTANCE: 30 m ohms max.

INSULATION RESISTANCE: 100 M ohms min.

DIELECTRIC STRENGTH: 500 V AC (50-60 Hz) between open terminals and between the frame and terminal.

OPERATING LIFE: 10,000 cycles with load

OPERATING FORCE: 200 ± 100 gf (1.96 ± 0.98N)

TRAVEL: 4 ± 0.3 mm

OPERATING TEMPERATURE: -20˚C to 70˚C

Materials

KNOB: POM

FRAME: SPCC

CONTACT: Silver clad

TERMINAL: Silver plated

SK Series
Miniature Slide Switches

SK-22D28-G NS DPDT NON-SHORTING

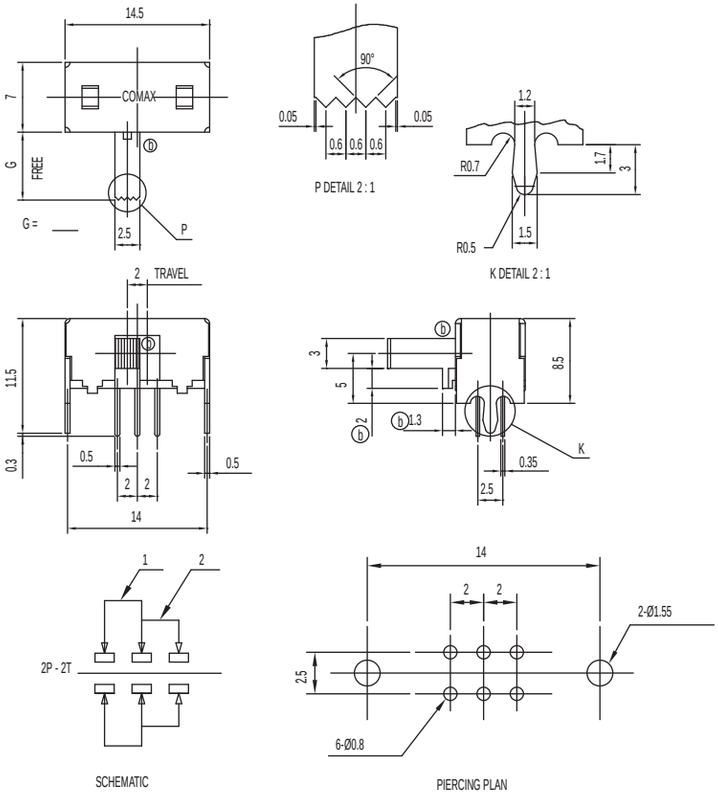

Specifications

CONTACT RATING: 0.3A @ 30 VDC

INITIAL CONTACT RESISTANCE: 30 m ohms max.

INSULATION RESISTANCE: 100 M ohms min.

DIELECTRIC STRENGTH: 500 V AC (50-60 Hz) between open terminals and between the frame and terminal.

OPERATING LIFE: 10,000 cycles with load

OPERATING FORCE: 200 ± 100 gf (1.96 ± 0.98N)

TRAVEL: 2 ± 0.3 mm

OPERATING TEMPERATURE: -20˚C to 70˚C

Materials

KNOB: POM

FRAME: SPCC

CONTACT: Silver clad

TERMINAL: Silver plated

SK-23D28-G NS 2P3T NON-SHORTING

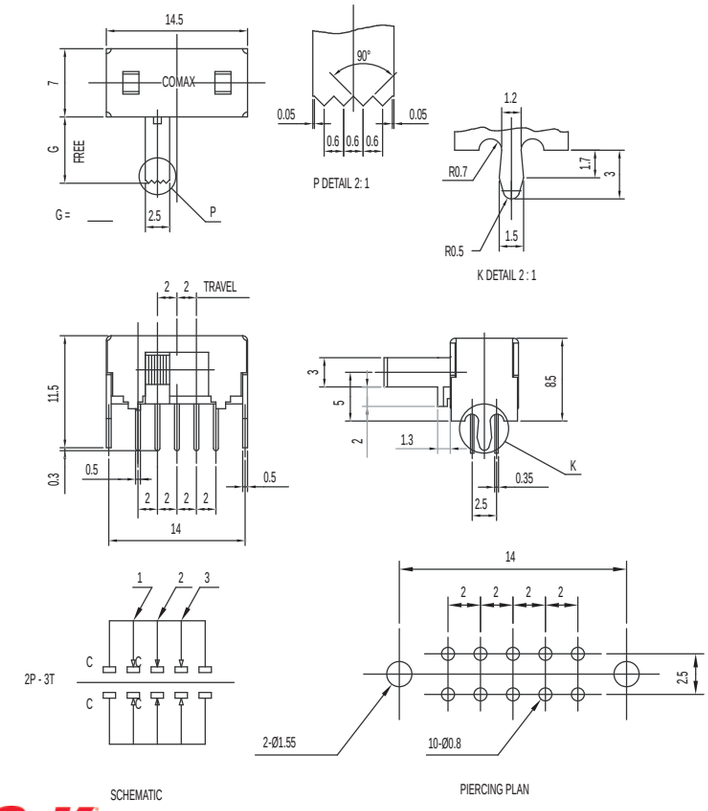

Specifications

CONTACT RATING: 0.3A @ 30 VDC

INITIAL CONTACT RESISTANCE: 30 m ohms max.

INSULATION RESISTANCE: 100 M ohms min.

DIELECTRIC STRENGTH: 500 V AC (50-60 Hz) between open terminals and between the frame and terminal.

OPERATING LIFE: 10,000 cycles with load

OPERATING FORCE: 200 ± 100 gf (1.96 ± 0.98N)
300 ± 150 gf (2.94 ± 1.47N)

TRAVEL: 2 ± 0.3 mm

OPERATING TEMPERATURE: -20˚C to 70˚C

Materials

KNOB: POM

FRAME: SPCC

CONTACT: Silver clad

TERMINAL: Silver plated

Dimensions are shown: mm
Specifications and dimensions subject to change

SK-24D18-DG NS 2P4T NON-SHORTING

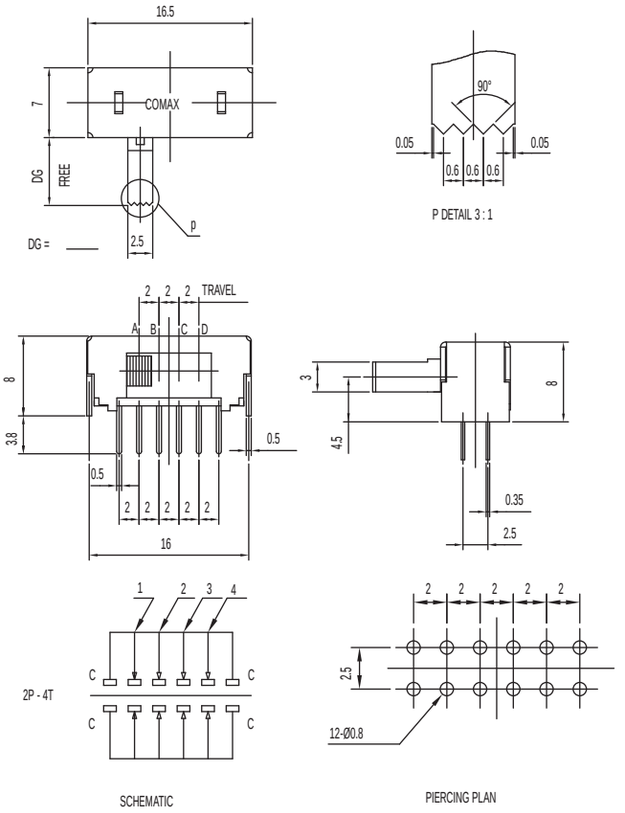

Specifications

CONTACT RATING: 0.3A @ 30 VDC
INITIAL CONTACT RESISTANCE: 30 m ohms max.
INSULATION RESISTANCE: 100 M ohms min.
DIELECTRIC STRENGTH: 500 V AC (50-60 Hz) between open terminals and between the frame and terminal.
OPERATING LIFE: 10,000 cycles with load
OPERATING FORCE: 200 ± 100 gf (1.96 ± 0.98N)
250 ± 100 gf (2.45 ± 0.98N); 300 ± 150 gf (2.94 ± 1.47N)
TRAVEL: 2 ± 0.3 mm
OPERATING TEMPERATURE: -20˚C to 70˚C

Materials

KNOB: POM
FRAME: SPCC
CONTACT: Silver clad
TERMINAL: Silver plated

SK-24D28-G NS 2P4T NON-SHORTING

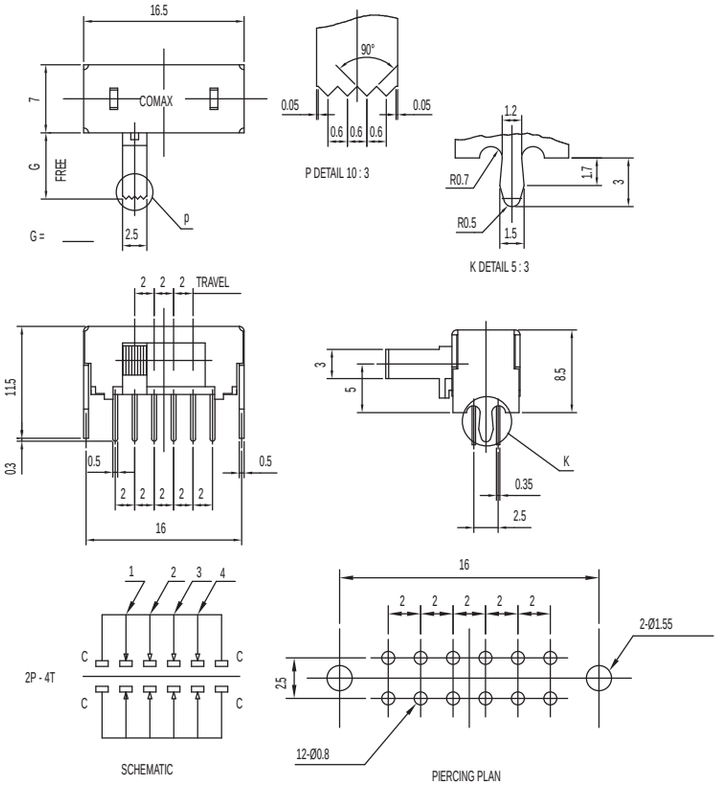

Specifications

CONTACT RATING: 0.3A @ 30 VDC
INITIAL CONTACT RESISTANCE: 30 m ohms max.
INSULATION RESISTANCE: 100 M ohms min.
DIELECTRIC STRENGTH: 500 V AC (50-60 Hz) between open terminals and between the frame and terminal.
OPERATING LIFE: 10,000 cycles with load
OPERATING FORCE: 200 ± 100 gf (1.96 ± 0.98N)
250 ± 100 gf (2.45 ± 0.98N); 300 ± 150 gf (2.94 ± 1.47N)
TRAVEL: 2 ± 0.3 mm
OPERATING TEMPERATURE: -20˚C to 70˚C

Materials

KNOB: POM
FRAME: SPCC
CONTACT: Silver clad
TERMINAL: Silver plated

SK Series
Miniature Slide Switches

SK-42D28-G NS 4P2T NON-SHORTING

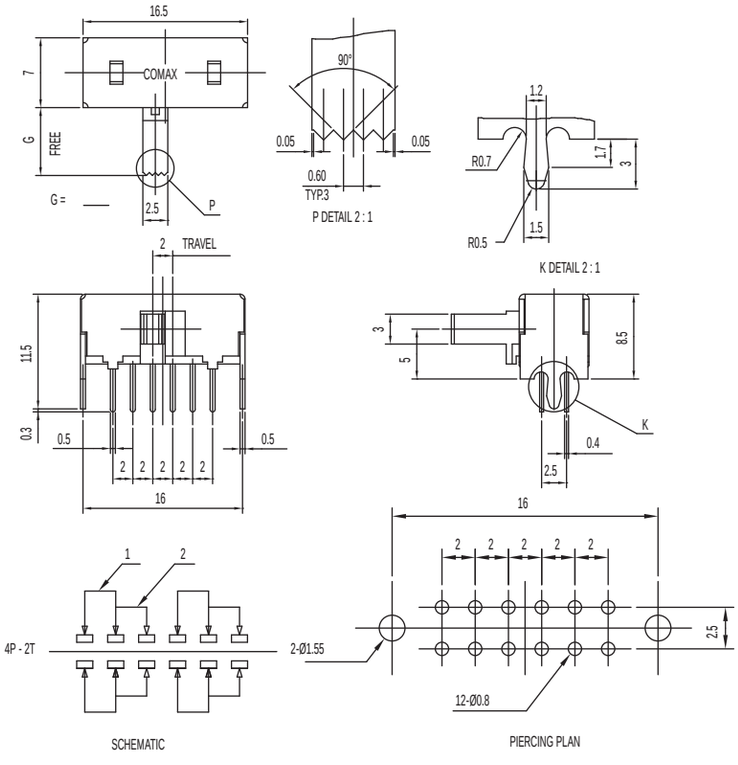

Specifications

CONTACT RATING: 0.3A @ 30 VDC

INITIAL CONTACT RESISTANCE: 30 m ohms max.

INSULATION RESISTANCE: 100 M ohms min.

DIELECTRIC STRENGTH: 500 V AC (50-60 Hz) between open terminals and between the frame and terminal.

OPERATING LIFE: 10,000 cycles with load

OPERATING FORCE: 200 ± 100 gf (1.96 ± 0.98N)

TRAVEL: 2 ± 0.3 mm

OPERATING TEMPERATURE: -20˚C to 70˚C

Materials

KNOB: POM

FRAME: SPCC

CONTACT: Silver clad

TERMINAL: Silver plated

SK-43D28-G NS 4P3T NON-SHORTING

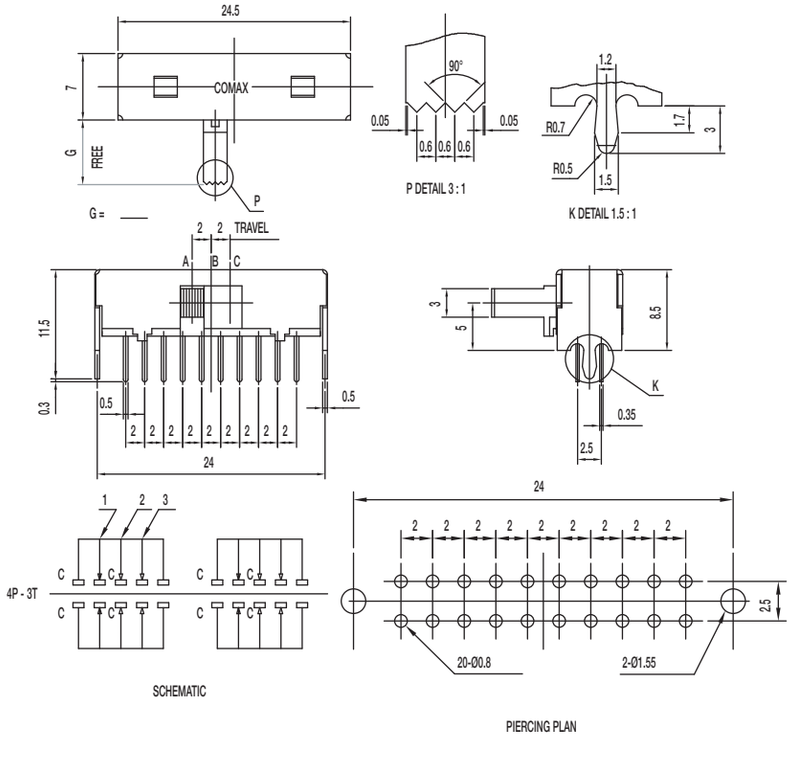

Specifications

CONTACT RATING: 0.3A @ 30 VDC

INITIAL CONTACT RESISTANCE: 30 m ohms max.

INSULATION RESISTANCE: 100 M ohms min.

DIELECTRIC STRENGTH: 500 V AC (50-60 Hz) between open terminals and between the frame and terminal.

OPERATING LIFE: 10,000 cycles with load

OPERATING FORCE: 200 ± 100 gf (1.96 ± 0.98N)
300 ± 150 gf (2.94 ± 1.47N)

TRAVEL: 2 ± 0.3 mm

OPERATING TEMPERATURE: -20˚C to 70˚C

Materials

KNOB: POM

FRAME: SPCC

CONTACT: Silver clad

TERMINAL: Silver plated

SK-12F28-G NS 1P2T NON-SHORTING

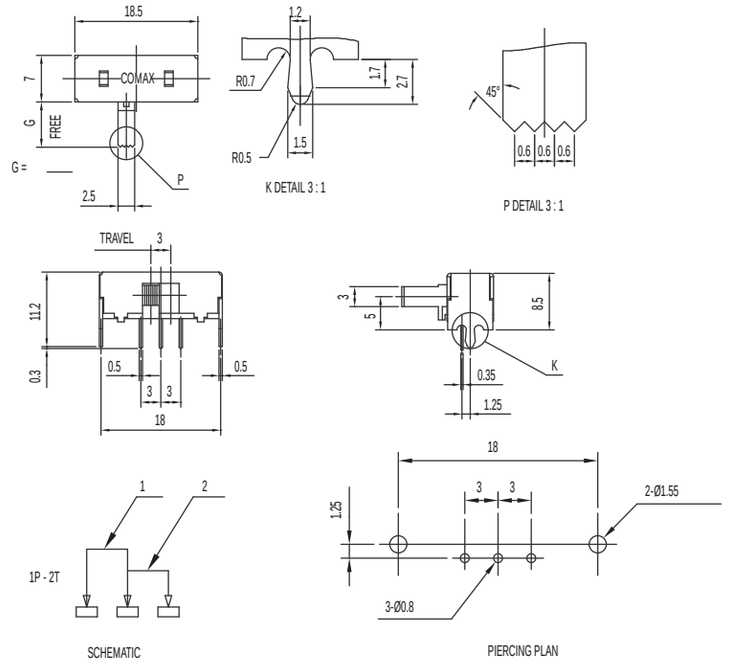

Specifications

CONTACT RATING: 0.3A @ 30 VDC
INITIAL CONTACT RESISTANCE: 30 m ohms max.
INSULATION RESISTANCE: 100 M ohms min.
DIELECTRIC STRENGTH: 500 V AC (50-60 Hz) between open terminals and between the frame and terminal.
OPERATING LIFE: 10,000 cycles with load
OPERATING FORCE: 200 ± 100 gf (1.96 ± 0.98N)
TRAVEL: 3 ± 0.3 mm
OPERATING TEMPERATURE: -20˚C to 70˚C

Materials

KNOB: POM
FRAME: SPCC
CONTACT: Silver clad
TERMINAL: Silver plated

SK-22F28-G NS DPDT NON-SHORTING

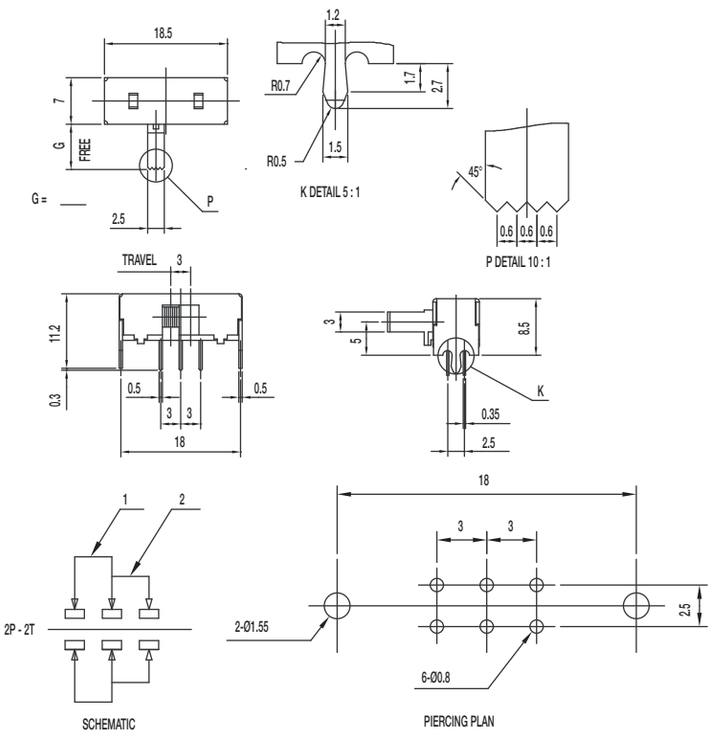

Specifications

CONTACT RATING: 0.3A @ 30 VDC
INITIAL CONTACT RESISTANCE: 30 m ohms max.
INSULATION RESISTANCE: 100 M ohms min.
DIELECTRIC STRENGTH: 500 V AC (50-60 Hz) between open terminals and between the frame and terminal.
OPERATING LIFE: 10,000 cycles with load
OPERATING FORCE: 200 ± 100 gf (1.96 ± 0.98N)
TRAVEL: 3 ± 0.3 mm
OPERATING TEMPERATURE: -20˚C to 70˚C

Materials

KNOB: POM
FRAME: SPCC
CONTACT: Silver clad
TERMINAL: Silver plated

SK-23F28-G NS 2P3T NON-SHORTING

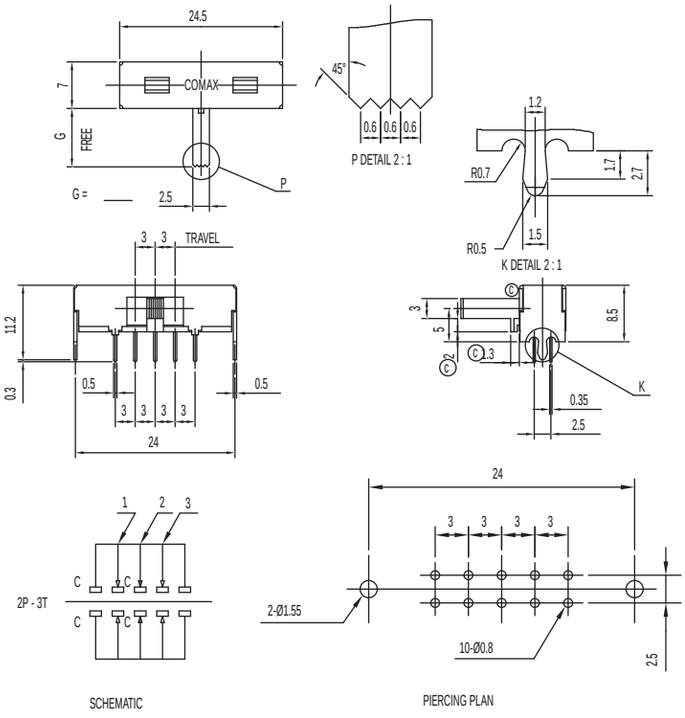

Specifications

CONTACT RATING: 0.3A @ 30 VDC

INITIAL CONTACT RESISTANCE: 30 m ohms max.

INSULATION RESISTANCE: 100 M ohms min.

DIELECTRIC STRENGTH: 500 V AC (50-60 Hz) between open terminals and between the frame and terminal.

OPERATING LIFE: 10,000 cycles with load

OPERATING FORCE: 150 ± 80 gf (1.47 ± 0.78N)
200 ± 100 gf (1.96 ± 0.98N)

TRAVEL: 3 ± 0.3 mm

OPERATING TEMPERATURE: -20˚C to 70˚C

Materials

KNOB: POM

FRAME: SPCC

CONTACT: Silver clad

TERMINAL: Silver plated

SK-24F28-G NS 2P4T NON-SHORTING

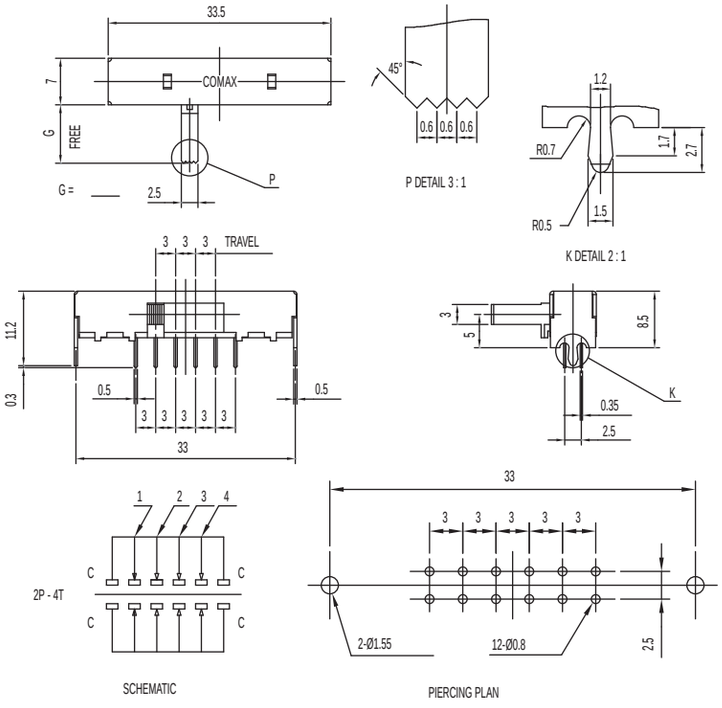

Specifications

CONTACT RATING: 0.3A @ 30 VDC

INITIAL CONTACT RESISTANCE: 30 m ohms max.

INSULATION RESISTANCE: 100 M ohms min.

DIELECTRIC STRENGTH: 500 V AC (50-60 Hz) between open terminals and between the frame and terminal.

OPERATING LIFE: 10,000 cycles with load

OPERATING FORCE: 200 ± 100 gf (1.96 ± 0.98N)
250 ± 100 gf (2.45 ± 0.98N)

TRAVEL: 3 ± 0.3 mm

OPERATING TEMPERATURE: -20˚C to 70˚C

Materials

KNOB: POM

FRAME: SPCC

CONTACT: Silver clad

TERMINAL: Silver plated

SK-42F28-G NS 2P4T NON-SHORTING

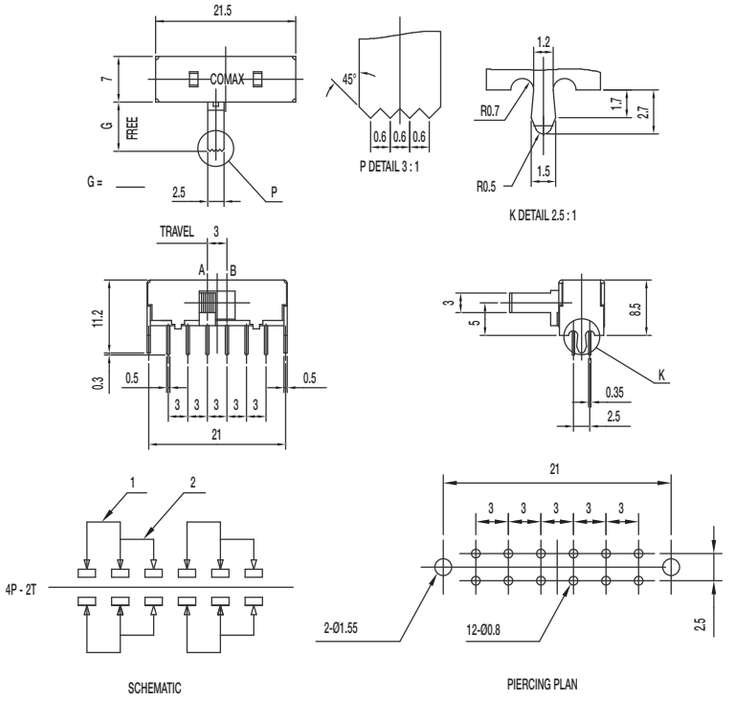

Specifications

CONTACT RATING: 0.3A @ 30 VDC

INITIAL CONTACT RESISTANCE: 30 m ohms max.

INSULATION RESISTANCE: 100 M ohms min.

DIELECTRIC STRENGTH: 500 V AC (50-60 Hz) between open terminals and between the frame and terminal.

OPERATING LIFE: 10,000 cycles with load

OPERATING FORCE: 200 ± 100 gf (1.96 ± 0.98N)
250 ± 100 gf (2.45 ± 0.98N)

TRAVEL: 3 ± 0.3 mm

OPERATING TEMPERATURE: -20˚C to 70˚C

Materials

KNOB: POM

FRAME: SPCC

CONTACT: Silver clad

TERMINAL: Silver plated

SK-12H04-G NS 1P2T NON-SHORTING

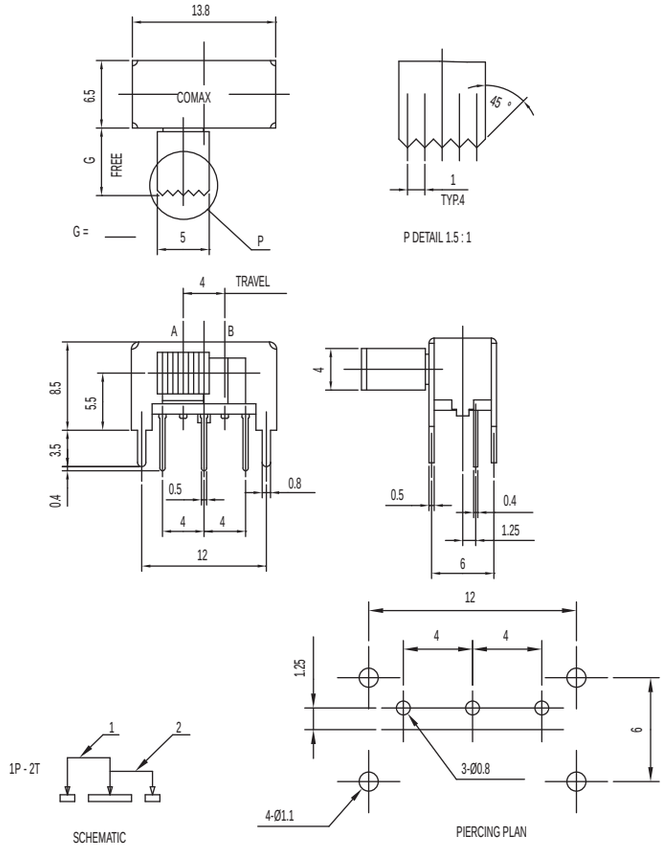

Specifications

CONTACT RATING: 0.3A @ 30 VDC

INITIAL CONTACT RESISTANCE: 30 m ohms max.

INSULATION RESISTANCE: 100 M ohms min.

DIELECTRIC STRENGTH: 500 V AC (50-60 Hz) between open terminals and between the frame and terminal.

OPERATING LIFE: 10,000 cycles with load

OPERATING FORCE: 250 ± 100 gf (2.45 ± 0.98N)

TRAVEL: 4 ± 0.3 mm

OPERATING TEMPERATURE: -20˚C to 70˚C

Materials

KNOB: POM

FRAME: SPCC

CONTACT: Silver clad

TERMINAL: Silver plated

SK-22H04-G NS DPDT NON-SHORTING

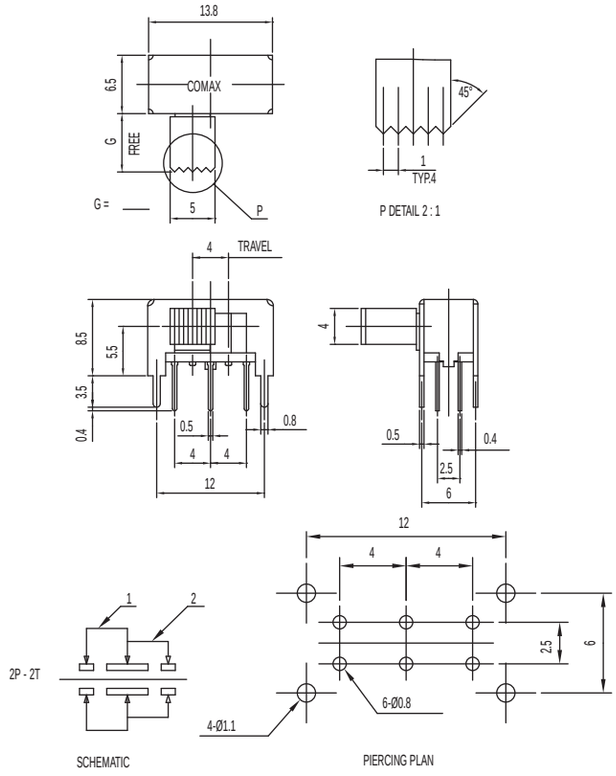

Specifications

CONTACT RATING: 0.3A @ 30 VDC

INITIAL CONTACT RESISTANCE: 30 m ohms max.

INSULATION RESISTANCE: 100 M ohms min.

DIELECTRIC STRENGTH: 500 V AC (50-60 Hz) between open terminals and between the frame and terminal.

OPERATING LIFE: 10,000 cycles with load

OPERATING FORCE: 250 ± 100 gf (2.45 ± 0.98N)

TRAVEL: 4 ± 0.3 mm

OPERATING TEMPERATURE: -20˚C to 70˚C

Materials

KNOB: POM

FRAME: SPCC

CONTACT: Silver clad

TERMINAL: Silver plated

SK-22H24-G NS DPDT NON-SHORTING

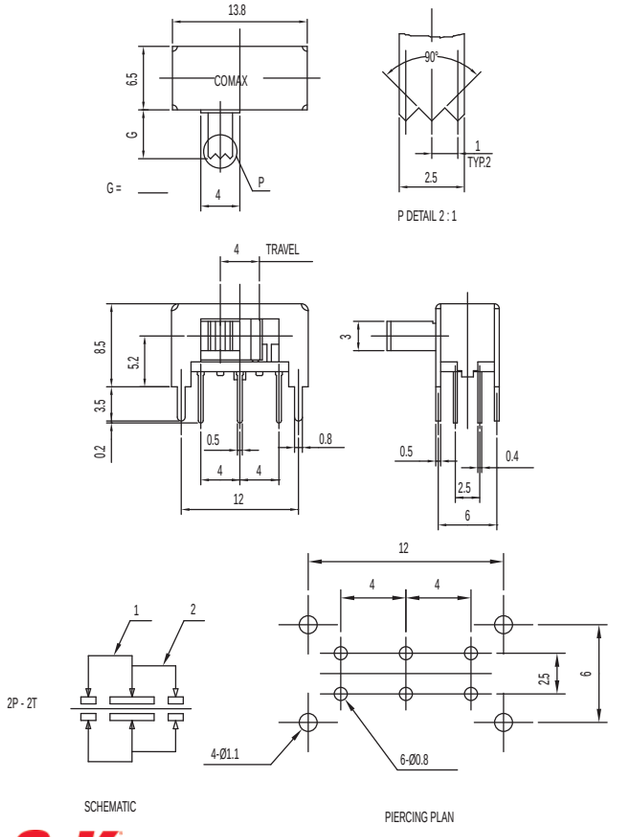

Specifications

CONTACT RATING: 0.3A @ 30 VDC

INITIAL CONTACT RESISTANCE: 30 m ohms max.

INSULATION RESISTANCE: 100 M ohms min.

DIELECTRIC STRENGTH: 500 V AC (50-60 Hz) between open terminals and between the frame and terminal.

OPERATING LIFE: 10,000 cycles with load

OPERATING FORCE: 250 ± 100 gf (2.45 ± 0.98N)

TRAVEL: 4 ± 0.3 mm

OPERATING TEMPERATURE: -20˚C to 70˚C

Materials

KNOB: POM

FRAME: SPCC

CONTACT: Silver clad

TERMINAL: Silver plated

SK-22H44-G NS DPDT NON-SHORTING

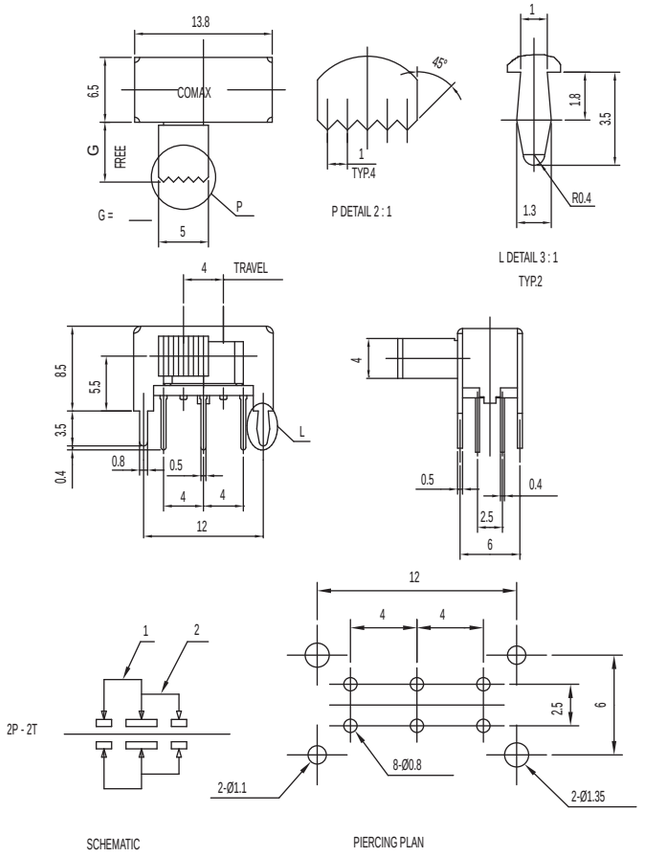

Specifications

CONTACT RATING: 0.3A @ 30 VDC

INITIAL CONTACT RESISTANCE: 30 m ohms max.

INSULATION RESISTANCE: 100 M ohms min.

DIELECTRIC STRENGTH: 500 V AC (50-60 Hz) between open terminals and between the frame and terminal.

OPERATING LIFE: 10,000 cycles with load

OPERATING FORCE: 250 ± 150 gf (2.45 ± 1.47N)

TRAVEL: 4 ± 0.3 mm

OPERATING TEMPERATURE: -20˚C to 70˚C

Materials

KNOB: POM

FRAME: SPCC

CONTACT: Silver clad

TERMINAL: Silver plated

SK-23D04-G 2P3T

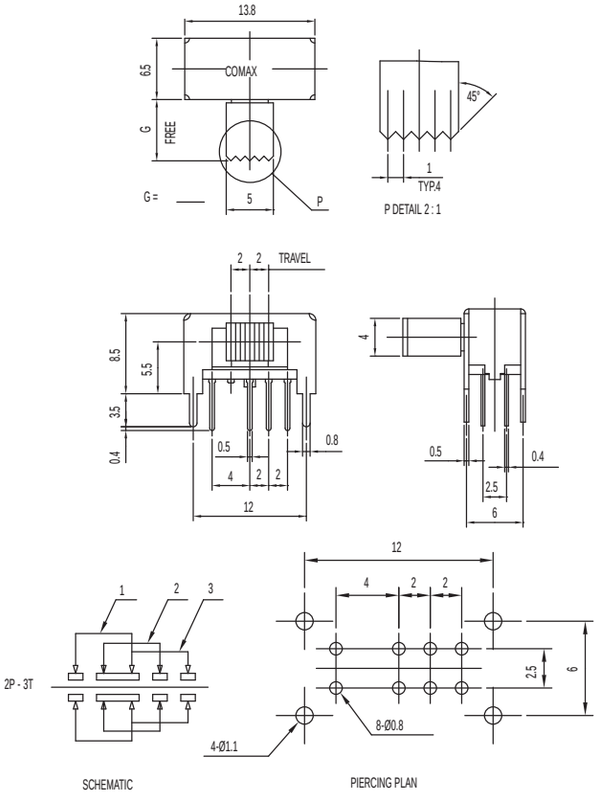

Specifications

CONTACT RATING: 0.3A @ 30 VDC

INITIAL CONTACT RESISTANCE: 30 m ohms max.

INSULATION RESISTANCE: 100 M ohms min.

DIELECTRIC STRENGTH: 500 V AC (50-60 Hz) between open terminals and between the frame and terminal.

OPERATING LIFE: 10,000 cycles with load

OPERATING FORCE: 200 ± 100 gf (1.96 ± 0.98N)
300 ± 150 gf (2.94 ± 1.47N)

TRAVEL: 2 ± 0.3 mm

OPERATING TEMPERATURE: -20˚C to 70˚C

Materials

KNOB: POM

FRAME: SPCC

CONTACT: Silver clad

TERMINAL: Silver plated

SK-23D23-G NS 2P3T NON-SHORTING

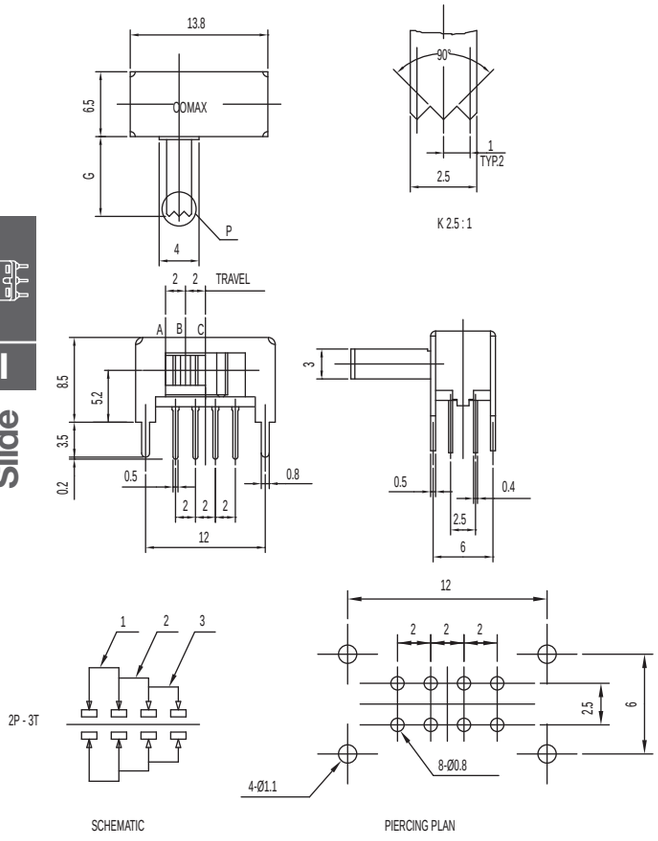

Specifications

CONTACT RATING: 0.3A @ 30 VDC

INITIAL CONTACT RESISTANCE: 30 m ohms max.

INSULATION RESISTANCE: 100 M ohms min.

DIELECTRIC STRENGTH: 500 V AC (50-60 Hz) between open terminals and between the frame and terminal.

OPERATING LIFE: 10,000 cycles with load

OPERATING FORCE: 200 ± 100 gf (1.96 ± 0.98N)
300 ± 150 gf (2.94 ± 1.47N)

TRAVEL: 2 ± 0.3 mm

OPERATING TEMPERATURE: -20˚C to 70˚C

Materials

KNOB: POM

FRAME: SPCC

CONTACT: Silver clad

TERMINAL: Silver plated

SK-23D24-G 2P3T

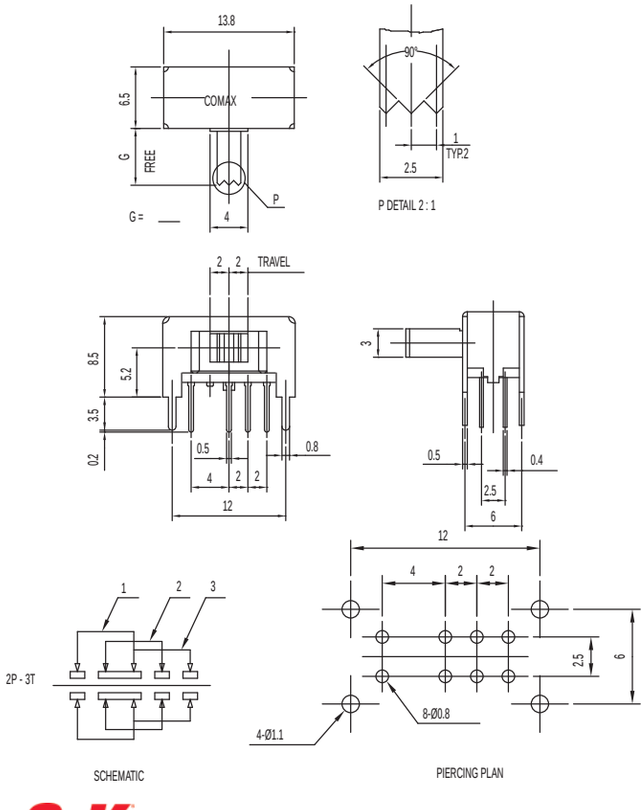

Specifications

CONTACT RATING: 0.3A @ 30 VDC

INITIAL CONTACT RESISTANCE: 30 m ohms max.

INSULATION RESISTANCE: 100 M ohms min.

DIELECTRIC STRENGTH: 500 V AC (50-60 Hz) between open terminals and between the frame and terminal.

OPERATING LIFE: 10,000 cycles with load

OPERATING FORCE: 200 ± 100 gf (1.96 ± 0.98N)
300 ± 150 gf (2.94 ± 1.47N)

TRAVEL: 2 ± 0.3 mm

OPERATING TEMPERATURE: -20˚C to 70˚C

Materials

KNOB: POM

FRAME: SPCC

CONTACT: Silver clad

TERMINAL: Silver plated

SK-23D44-G K 2P3T NON-SHORTING AND SHORTING

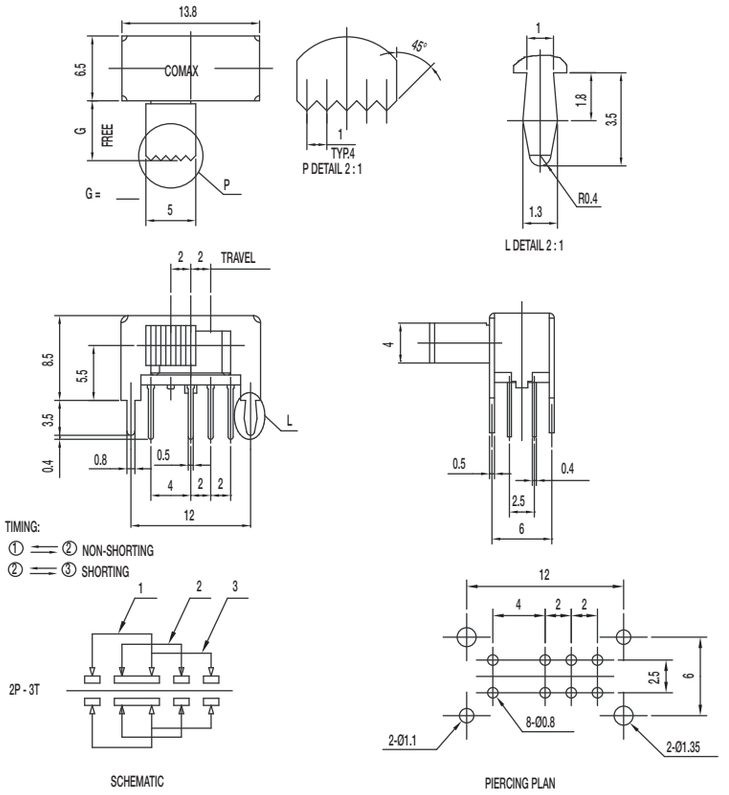

Specifications

CONTACT RATING: 0.3A @ 30 VDC

INITIAL CONTACT RESISTANCE: 30 m ohms max.

INSULATION RESISTANCE: 100 M ohms min.

DIELECTRIC STRENGTH: 500 V AC (50-60 Hz) between open terminals and between the frame and terminal.

OPERATING LIFE: 10,000 cycles with load

OPERATING FORCE: 250 ± 150 gf (2.45 ± 1.47N)
300 ± 150 gf (2.94 ± 1.47N)

TRAVEL: 2 ± 0.3 mm

OPERATING TEMPERATURE: -20˚C to 70˚C

Materials

KNOB: POM

FRAME: SPCC

CONTACT: Silver clad

TERMINAL: Silver plated

SK-24D04-G 2P4T

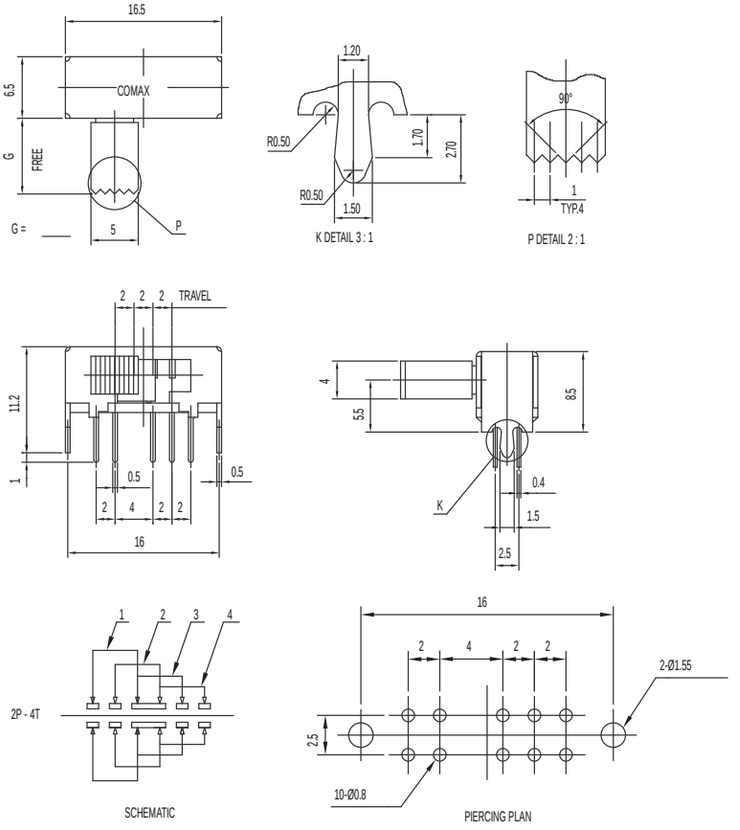

Specifications

CONTACT RATING: 0.3A @ 30 VDC

INITIAL CONTACT RESISTANCE: 30 m ohms max.

INSULATION RESISTANCE: 100 M ohms min.

DIELECTRIC STRENGTH: 500 V AC (50-60 Hz) between open terminals and between the frame and terminal.

OPERATING LIFE: 10,000 cycles with load

OPERATING FORCE: 200 ± 100 gf (1.96 ± 0.98N
250 ± 150 gf (2.45 ± 1.47N); 300 ± 150 gf (2.94 ± 1.47N)

TRAVEL: 2 ± 0.3 mm

OPERATING TEMPERATURE: -20˚C to 70˚C

Materials

KNOB: POM

FRAME: SPCC

CONTACT: Silver clad

TERMINAL: Silver plated

Dimensions are shown: mm
Specifications and dimensions subject to change

SK Series
Miniature Slide Switches

SK-24D24 1P3T NON-SHORTING

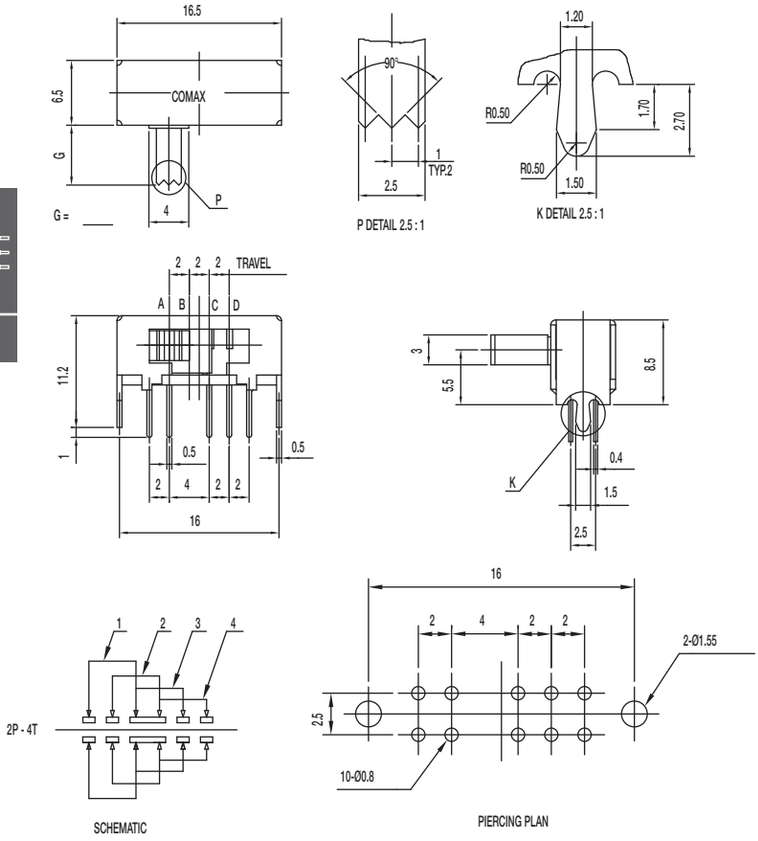

Specifications

CONTACT RATING: 0.3A @ 30 VDC

INITIAL CONTACT RESISTANCE: 30 m ohms max.

INSULATION RESISTANCE: 100 M ohms min.

DIELECTRIC STRENGTH: 500 V AC (50-60 Hz) between open terminals and between the frame and terminal.

OPERATING LIFE: 10,000 cycles with load

OPERATING FORCE: 200 ± 100 gf (1.96 ± 0.98N)
300 ± 150 gf (2.94 ± 1.47N)

TRAVEL: 2 ± 0.3 mm

OPERATING TEMPERATURE: -20˚C to 70˚C

Materials

KNOB: POM

FRAME: SPCC

CONTACT: Silver clad

TERMINAL: Silver plated

SK-12D04-G NS 1P2T NON-SHORTING

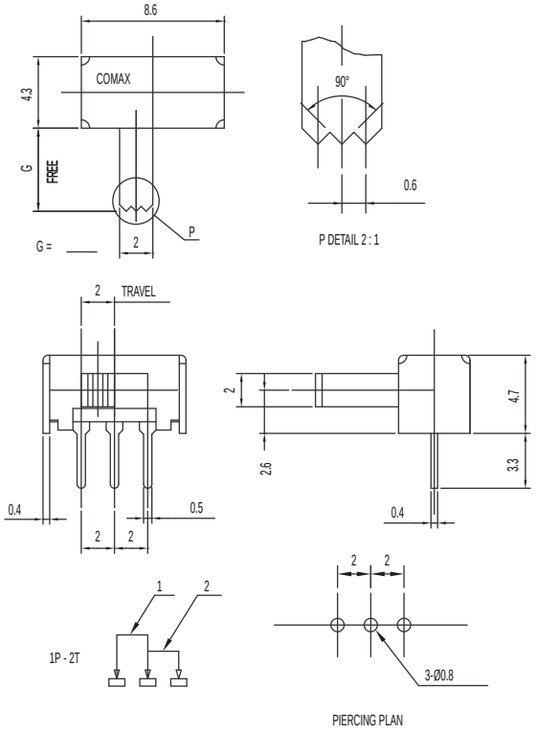

Specifications

CONTACT RATING: 0.3A @ 30 VDC

INITIAL CONTACT RESISTANCE: 30 m ohms max.

INSULATION RESISTANCE: 100 M ohms min.

DIELECTRIC STRENGTH: 500 V AC (50-60 Hz) between open terminals and between the frame and terminal.

OPERATING LIFE: 10,000 cycles with load

OPERATING FORCE: 250 ± 100 gf (2.45 ± 0.98N)

TRAVEL: 2 ± 0.3 mm

OPERATING TEMPERATURE: -20˚C to 70˚C

Materials

KNOB: POM

FRAME: SPCC

CONTACT: Silver clad

TERMINAL: Silver plated

SK-12D07-G NS PA 1P2T NON-SHORTING

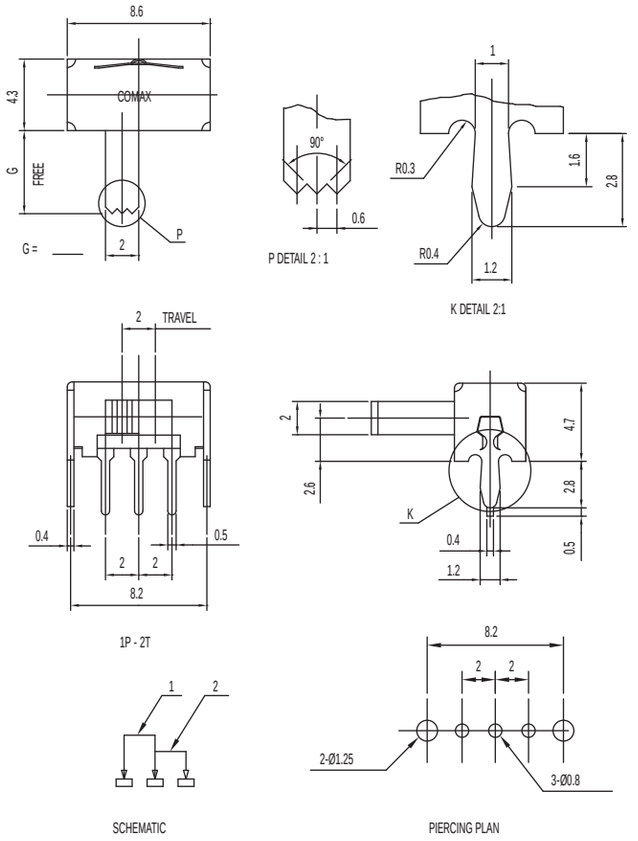

Specifications

CONTACT RATING: 0.3A @ 30 VDC

INITIAL CONTACT RESISTANCE: 30 m ohms max.

INSULATION RESISTANCE: 100 M ohms min.

DIELECTRIC STRENGTH: 500 V AC (50-60 Hz) between open terminals and between the frame and terminal.

OPERATING LIFE: 10,000 cycles with load

OPERATING FORCE: 250 ± 100 gf (2.45 ± 0.98N)

TRAVEL: 2 ± 0.3 mm

OPERATING TEMPERATURE: -20˚C to 70˚C

Materials

KNOB: PA

FRAME: SPCC

CONTACT: Silver clad

TERMINAL: Silver plated

SK-13D16-VG PA 1P3T

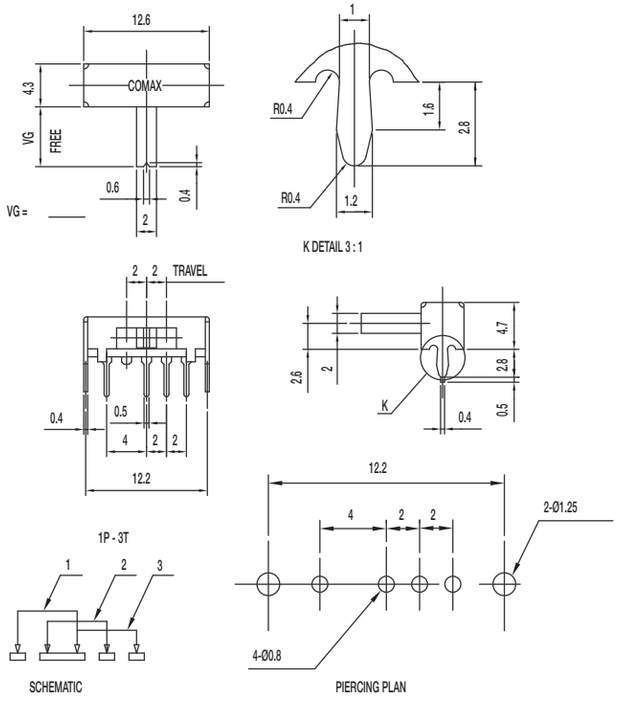

Specifications

CONTACT RATING: 0.3A @ 30 VDC

INITIAL CONTACT RESISTANCE: 30 m ohms max.

INSULATION RESISTANCE: 100 M ohms min.

DIELECTRIC STRENGTH: 500 V AC (50-60 Hz) between open terminals and between the frame and terminal.

OPERATING LIFE: 10,000 cycles with load

OPERATING FORCE: 200 ± 100 gf (1.96 ± 0.98N)
250 ± 100 gf (2.45 ± 0.98N)

TRAVEL: 2 ± 0.3 mm

OPERATING TEMPERATURE: -20˚C to 70˚C

Materials

KNOB: PA

FRAME: SPCC

CONTACT: Silver clad

TERMINAL: Silver plated

SK Series
Miniature Slide Switches

SK-14D01-G 1P4T

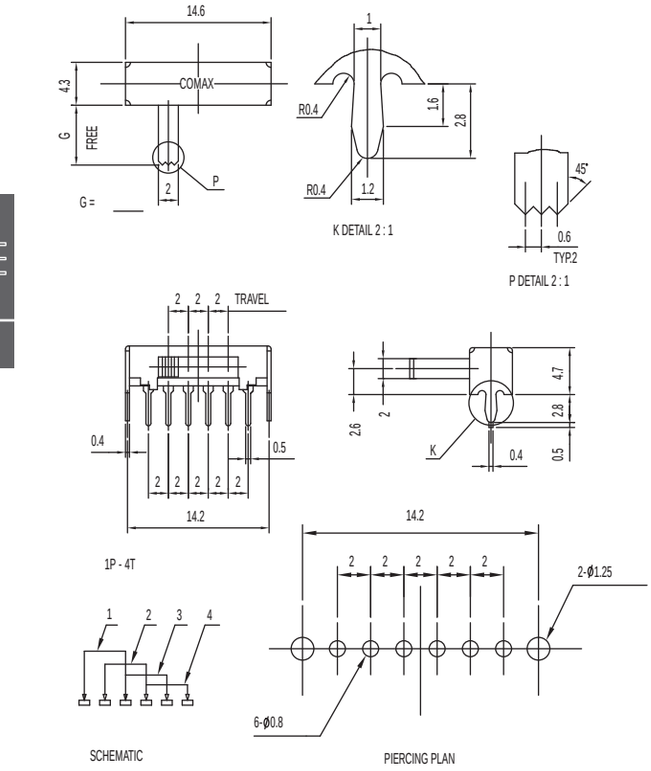

Specifications

CONTACT RATING: 0.3A @ 30 VDC

INITIAL CONTACT RESISTANCE: 30 m ohms max.

INSULATION RESISTANCE: 100 M ohms min.

DIELECTRIC STRENGTH: 500 V AC (50-60 Hz) between open terminals and between the frame and terminal.

OPERATING LIFE: 10,000 cycles with load

OPERATING FORCE: 200 ± 100 gf (1.96 ± 0.98N)
250 ± 100 gf (2.45 ± 0.98N)

TRAVEL: 2 ± 0.3 mm

OPERATING TEMPERATURE: -20˚C to 70˚C

Materials

KNOB: POM

FRAME: SPCC

CONTACT: Silver clad

TERMINAL: Silver plated

SK-14D07-VG PA 1P4T

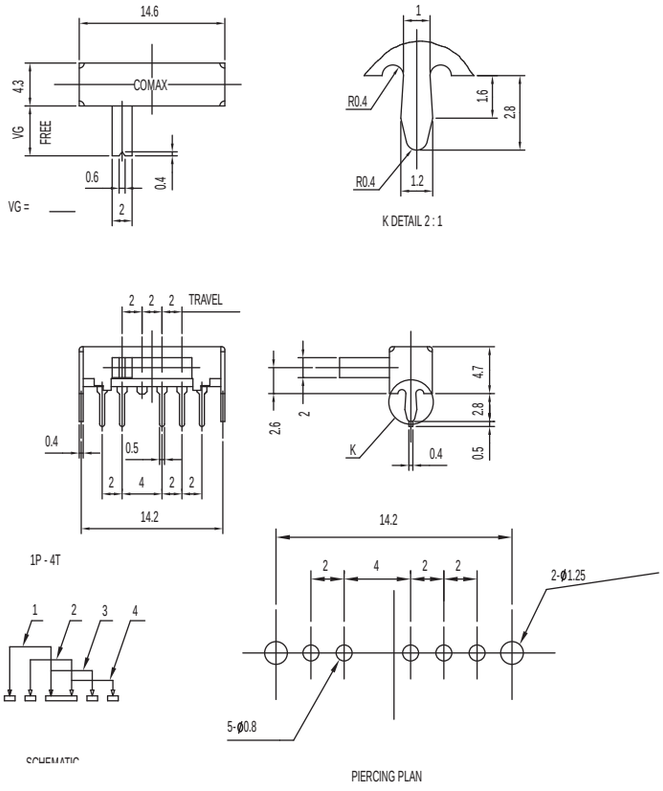

Specifications

CONTACT RATING: 0.3A @ 30 VDC

INITIAL CONTACT RESISTANCE: 30 m ohms max.

INSULATION RESISTANCE: 100 M ohms min.

DIELECTRIC STRENGTH: 500 V AC (50-60 Hz) between open terminals and between the frame and terminal.

OPERATING LIFE: 10,000 cycles with load

OPERATING FORCE: 200 ± 100 gf (1.96 ± 0.98N)
250 ± 100 gf (2.45 ± 0.98N)

TRAVEL: 2 ± 0.3 mm

OPERATING TEMPERATURE: -20˚C to 70˚C

Materials

KNOB: PA (UL94-V0)

FRAME: SPCC

CONTACT: Silver clad

TERMINAL: Silver plated

SK-22D07-G NS PA DPDT NON-SHORTING

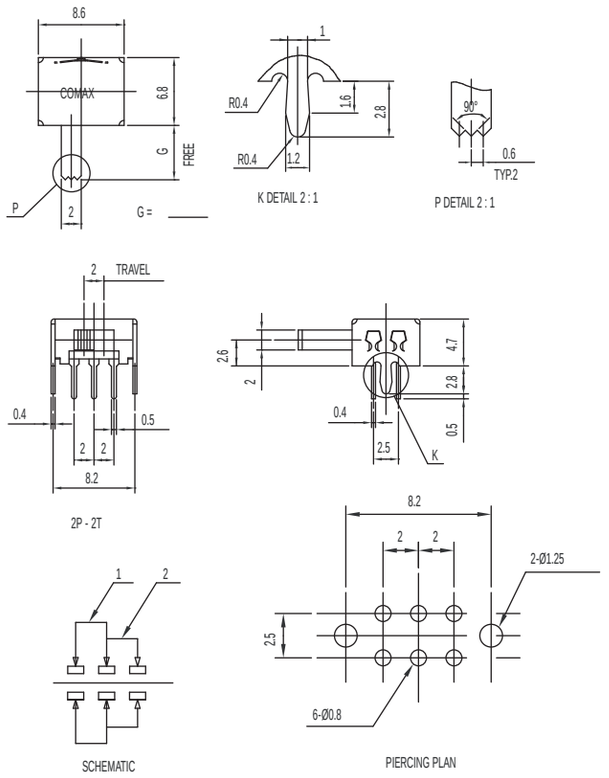

Specifications

CONTACT RATING: 0.3A @ 30 VDC
INITIAL CONTACT RESISTANCE: 30 m ohms max.
INSULATION RESISTANCE: 100 M ohms min.
DIELECTRIC STRENGTH: 500 V AC (50-60 Hz) between open terminals and between the frame and terminal.
OPERATING LIFE: 10,000 cycles with load
OPERATING FORCE: 250 ± 100 gf (2.45 ± 0.98N)
TRAVEL: 2 ± 0.3 mm
OPERATING TEMPERATURE: -20˚C to 70˚C

Materials

KNOB: PA (UL94V-0)
FRAME: SPCC
CONTACT: Silver clad
TERMINAL: Silver plated

SK-22H07-VG DPDT NON-SHORTING

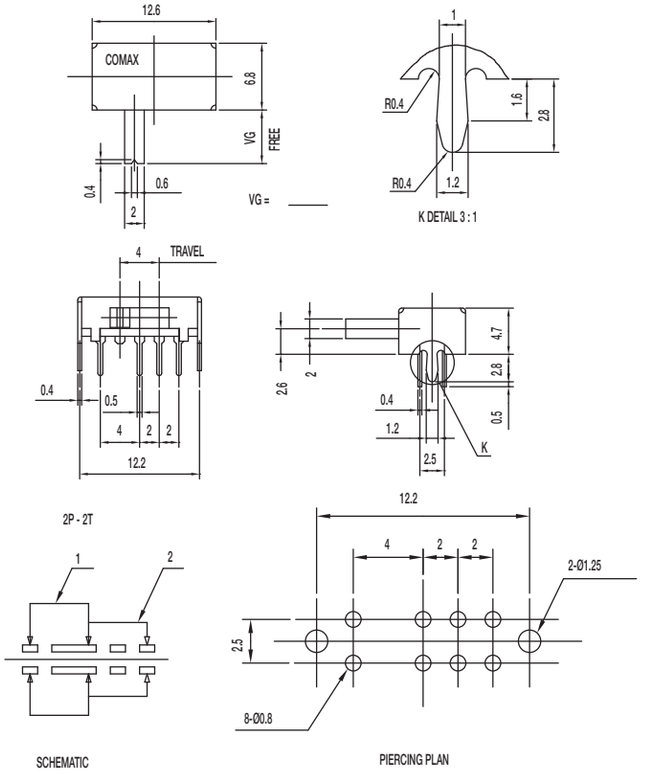

Specifications

CONTACT RATING: 0.3A @ 30 VDC
INITIAL CONTACT RESISTANCE: 30 m ohms max.
INSULATION RESISTANCE: 100 M ohms min.
DIELECTRIC STRENGTH: 500 V AC (50-60 Hz) between open terminals and between the frame and terminal.
OPERATING LIFE: 10,000 cycles with load
OPERATING FORCE: 200 ± 100 gf (1.96 ± 0.98N)
TRAVEL: 4 ± 0.3 mm
OPERATING TEMPERATURE: -20˚C to 70˚C

Materials

KNOB: POM
FRAME: SPCC
CONTACT: Silver clad
TERMINAL: Silver plated

SK-23D09-G 2P3T

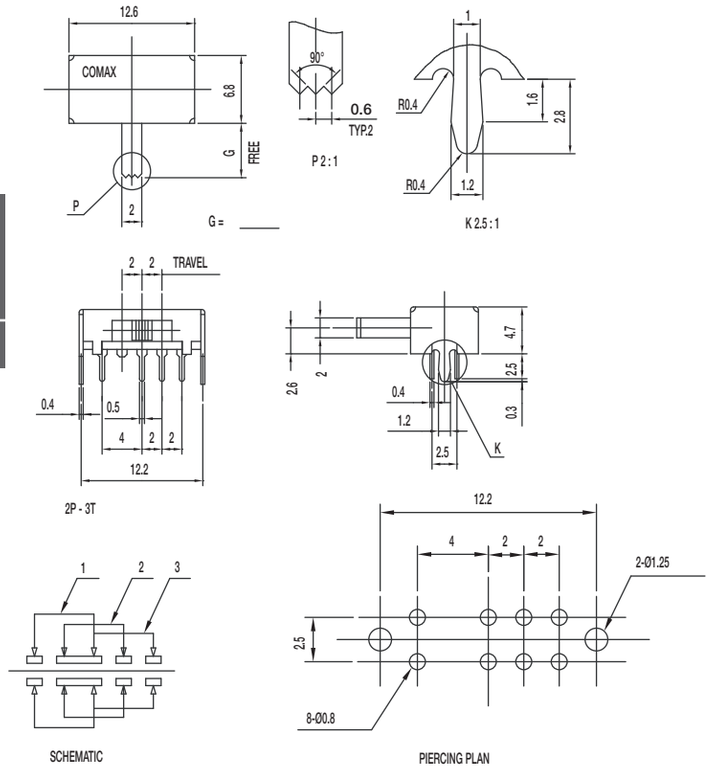

Specifications

CONTACT RATING: 0.3A @ 30 VDC

INITIAL CONTACT RESISTANCE: 30 m ohms max.

INSULATION RESISTANCE: 100 M ohms min.

DIELECTRIC STRENGTH: 500 V AC (50-60 Hz) between open terminals and between the frame and terminal.

OPERATING LIFE: 10,000 cycles with load

OPERATING FORCE: 200 ± 100 gf (1.96 ± 0.98N)
250 ± 100 gf (2.45 ± 0.98N)

TRAVEL: 2 ± 0.3 mm

OPERATING TEMPERATURE: -20˚C to 70˚C

Materials

KNOB: POM

FRAME: SPCC

CONTACT: Silver clad

TERMINAL: Silver plated

SK-24D02-G 2P4T

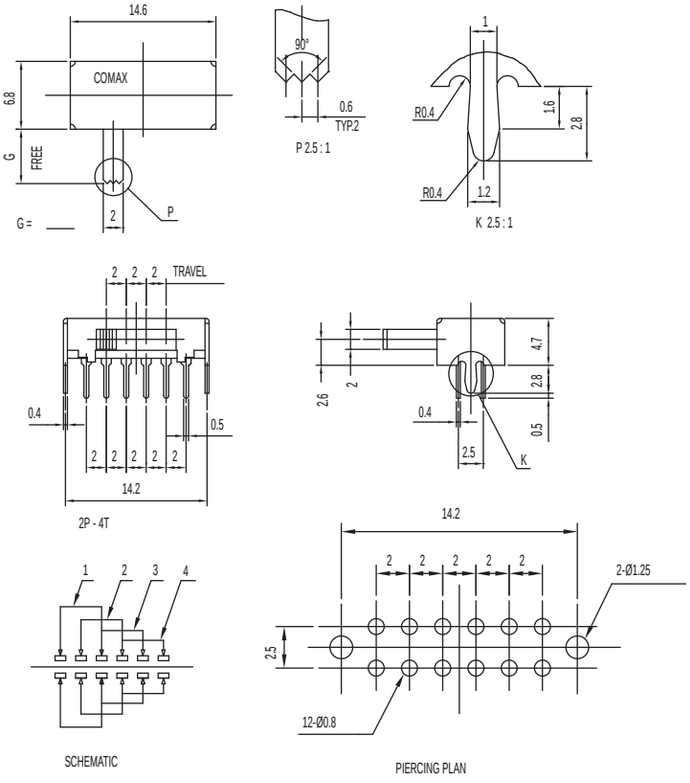

Specifications

CONTACT RATING: 0.3A @ 30 VDC

INITIAL CONTACT RESISTANCE: 30 m ohms max.

INSULATION RESISTANCE: 100 M ohms min.

DIELECTRIC STRENGTH: 500 V AC (50-60 Hz) between open terminals and between the frame and terminal.

OPERATING LIFE: 10,000 cycles with load

OPERATING FORCE: 250 ± 100 gf (2.45 ± 0.98N)

TRAVEL: 2 ± 0.3 mm

OPERATING TEMPERATURE: -20˚C to 70˚C

Materials

KNOB: POM

FRAME: SPCC

CONTACT: Silver clad

TERMINAL: Silver plated

SK-24D07-VG NS (S) 2P4T NON-SHORTING

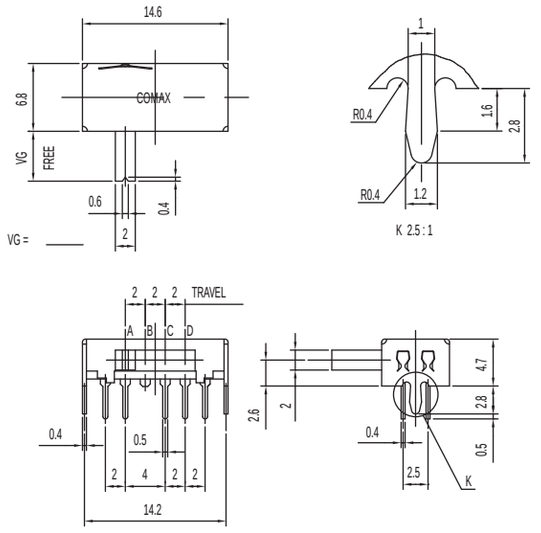

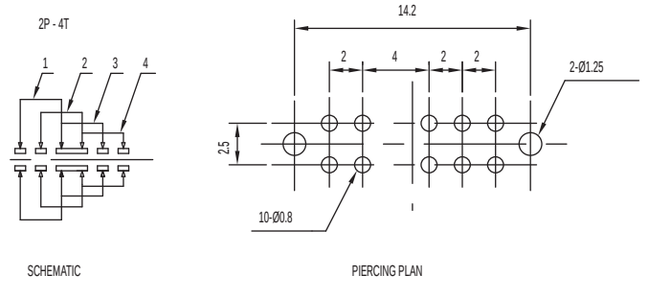

Specifications

CONTACT RATING: 0.3A @ 30 VDC

INITIAL CONTACT RESISTANCE: 30 m ohms max.

INSULATION RESISTANCE: 100 M ohms min.

DIELECTRIC STRENGTH: 500 V AC (50-60 Hz) between open terminals and between the frame and terminal.

OPERATING LIFE: 10,000 cycles with load

OPERATING FORCE: 350 ± 150 gf (3.43 ± 1.47N)

TRAVEL: 2 ± 0.3 mm

OPERATING TEMPERATURE: -20˚C to 70˚C

Materials

KNOB: POM

FRAME: SPCC

CONTACT: Silver clad

TERMINAL: Silver plated

SK-42D07-G NS 4P2T NON-SHORTING

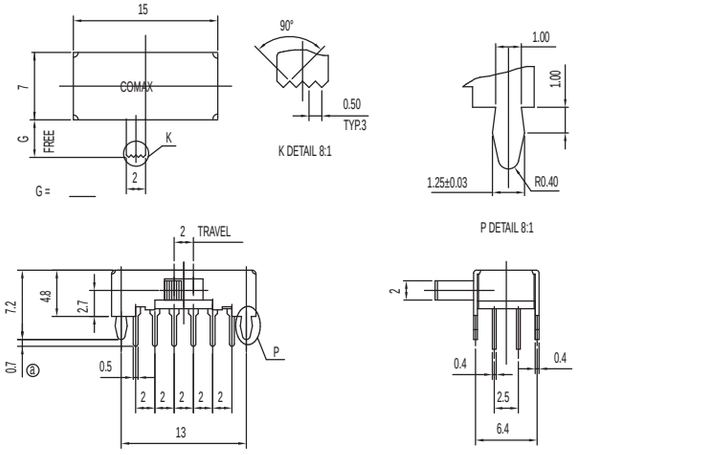

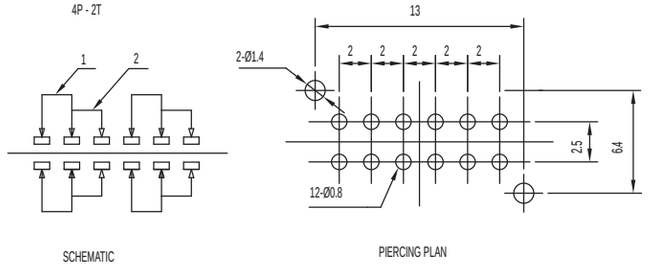

Specifications

CONTACT RATING: 0.3A @ 30 VDC

INITIAL CONTACT RESISTANCE: 30 m ohms max.

INSULATION RESISTANCE: 100 M ohms min.

DIELECTRIC STRENGTH: 500 V AC (50-60 Hz) between open terminals and between the frame and terminal.

OPERATING LIFE: 10,000 cycles with load

OPERATING FORCE: 250 ± 100 gf (2.45 ± 0.98N)

TRAVEL: 2 ± 0.3 mm

OPERATING TEMPERATURE: -20˚C to 70˚C

Materials

KNOB: POM

FRAME: SPCC

CONTACT: Silver clad

TERMINAL: Silver plated

SK Series
Miniature Slide Switches

SK-12D26-G 6.5 NS GY 1P2T NON-SHORTING

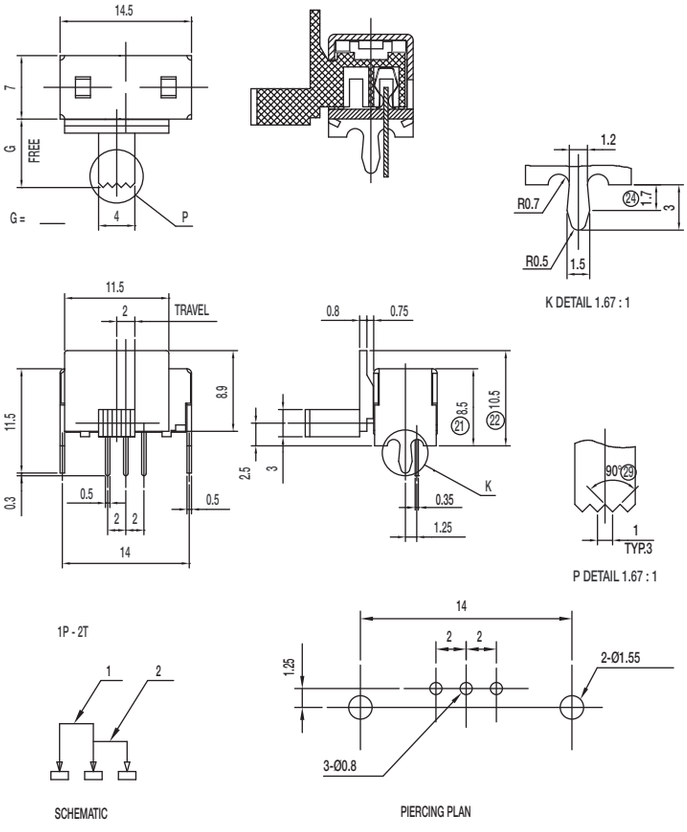

Specifications

CONTACT RATING: 0.3A @ 30 VDC
INITIAL CONTACT RESISTANCE: 20 m ohms max.
INSULATION RESISTANCE: 500 M ohms min.
DIELECTRIC STRENGTH: 500 V AC (50-60 Hz) between open terminals and between the frame and terminal.
OPERATING LIFE: 10,000 cycles with load
OPERATING FORCE: 250 ± 100 gf (2.45 ± 0.98N)
TRAVEL: 2 ± 0.3 mm
OPERATING TEMPERATURE: -20˚C to 70˚C

Materials

KNOB: POM
FRAME: SPCC
CONTACT: Silver clad
TERMINAL: Silver plated

SK-12D37-G NS 1P2T NON-SHORTING

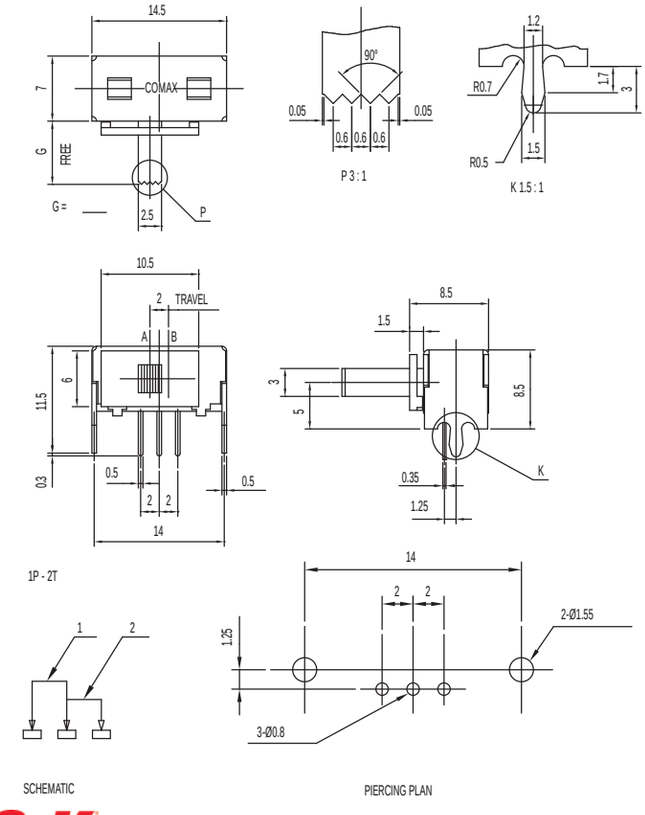

Specifications

CONTACT RATING: 0.3A @ 30 VDC
INITIAL CONTACT RESISTANCE: 30 m ohms max.
INSULATION RESISTANCE: 100 M ohms min.
DIELECTRIC STRENGTH: 500 V AC (50-60 Hz) between open terminals and between the frame and terminal.
OPERATING LIFE: 10,000 cycles with load
OPERATING FORCE: 200 ± 100 gf (1.96 ± 0.98N)
TRAVEL: 2 ± 0.3 mm
OPERATING TEMPERATURE: -20˚C to 70˚C

Materials

KNOB: POM
FRAME: SPCC
CONTACT: Silver clad
TERMINAL: Silver plated

SK-13D37-G NS 1P3T NON-SHORTING

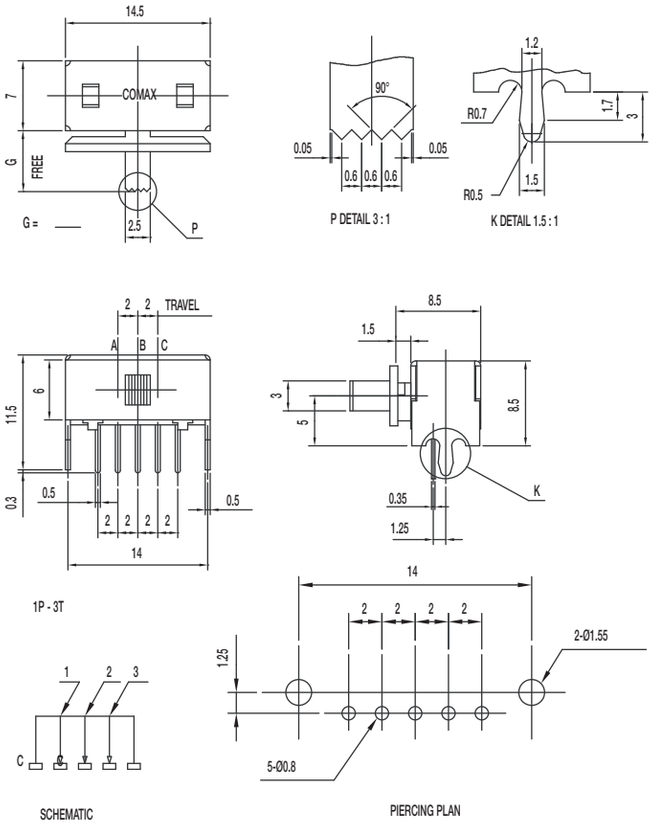

Specifications

CONTACT RATING: 0.3A @ 30 VDC
INITIAL CONTACT RESISTANCE: 30 m ohms max.
INSULATION RESISTANCE: 100 M ohms min.
DIELECTRIC STRENGTH: 500 V AC (50-60 Hz) between open terminals and between the frame and terminal.
OPERATING LIFE: 10,000 cycles with load
OPERATING FORCE: 200 ± 100 gf (1.96 ± 0.98N)
300 ± 150 gf (2.94 ± 1.47N)
TRAVEL: 2 ± 0.3 mm
OPERATING TEMPERATURE: -20˚C to 70˚C

Materials

KNOB: POM
FRAME: SPCC
CONTACT: Silver clad
TERMINAL: Silver plated

SK-22D27-G NS DPDT NON-SHORTING

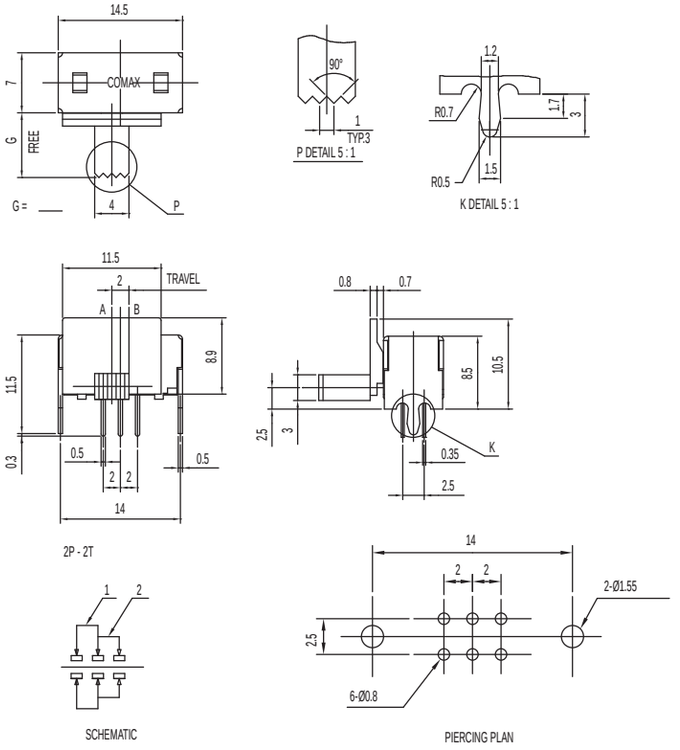

Specifications

CONTACT RATING: 0.3A @ 30 VDC
INITIAL CONTACT RESISTANCE: 30 m ohms max.
INSULATION RESISTANCE: 100 M ohms min.
DIELECTRIC STRENGTH: 500 V AC (50-60 Hz) between open terminals and between the frame and terminal.
OPERATING LIFE: 10,000 cycles with load
OPERATING FORCE: 250 ± 100 gf (2.45 ± 0.98N)
TRAVEL: 2 ± 0.3 mm
OPERATING TEMPERATURE: -20˚C to 70˚C

Materials

KNOB: POM
FRAME: SPCC
CONTACT: Silver clad
TERMINAL: Silver plated

SK Series
Miniature Slide Switches

SK-22D37-G NS DPDT NON-SHORTING

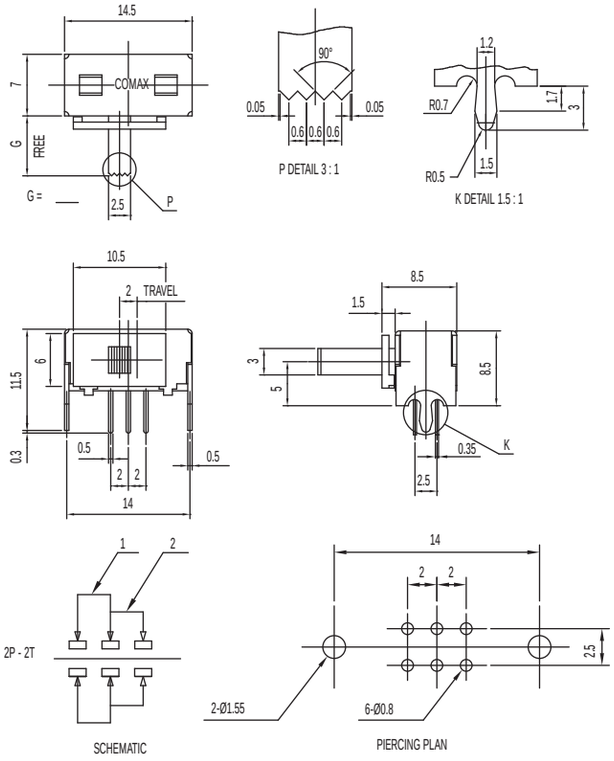

Specifications

CONTACT RATING: 0.3A @ 30 VDC

INITIAL CONTACT RESISTANCE: 30 m ohms max.

INSULATION RESISTANCE: 100 M ohms min.

DIELECTRIC STRENGTH: 500 V AC (50-60 Hz) between open terminals and between the frame and terminal.

OPERATING LIFE: 10,000 cycles with load

OPERATING FORCE: 200 ± 100 gf (1.96 ± 0.98N)

TRAVEL: 2 ± 0.3 mm

OPERATING TEMPERATURE: -20˚C to 70˚C

Materials

KNOB: POM

FRAME: SPCC

CONTACT: Silver clad

TERMINAL: Silver plated

SK-23D37-G NS 2P3T NON-SHORTING

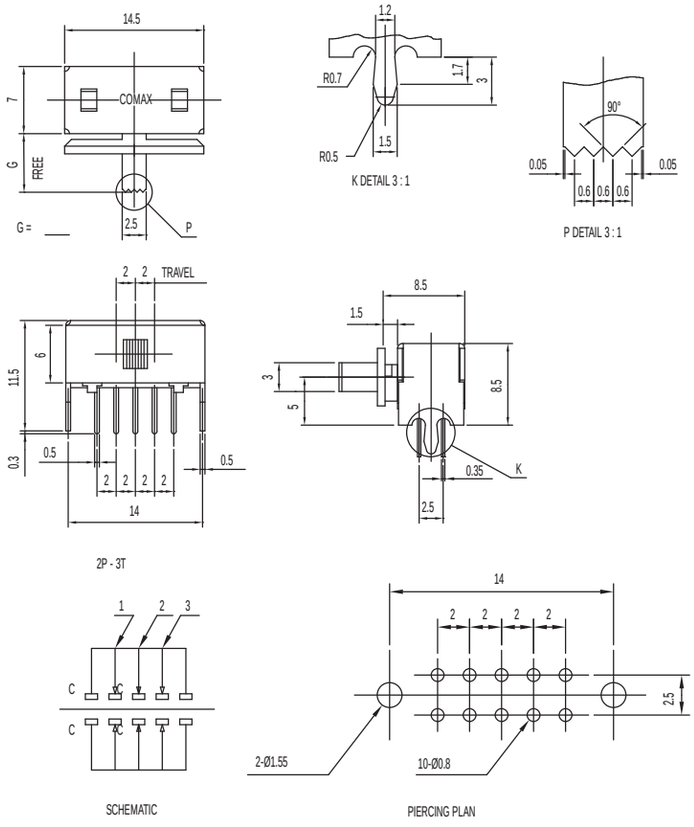

Specifications

CONTACT RATING: 0.3A @ 30 VDC

INITIAL CONTACT RESISTANCE: 30 m ohms max.

INSULATION RESISTANCE: 100 M ohms min.

DIELECTRIC STRENGTH: 500 V AC (50-60 Hz) between open terminals and between the frame and terminal.

OPERATING LIFE: 10,000 cycles with load

OPERATING FORCE: 200 ± 100 gf (1.96 ± 0.98N)
300 ± 150 gf (2.94 ± 1.47N)

TRAVEL: 2 ± 0.3 mm

OPERATING TEMPERATURE: -20˚C to 70˚C

Materials

KNOB: POM

FRAME: SPCC

CONTACT: Silver clad

TERMINAL: Silver plated

Dimensions are shown: mm
Specifications and dimensions subject to change

SK-22H01-G RP DPDT NON-SHORTING

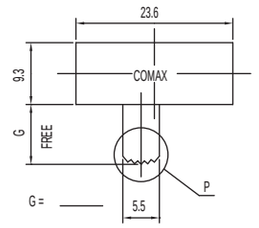

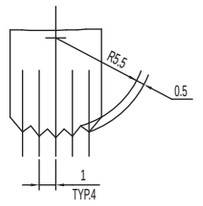

P DETAIL 2 : 1

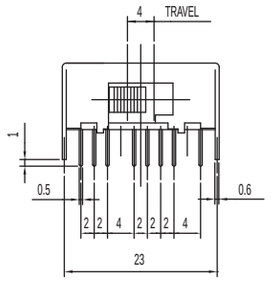

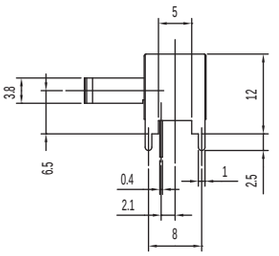

2P - 2T

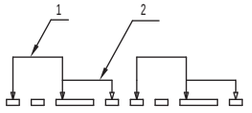

SCHEMATIC

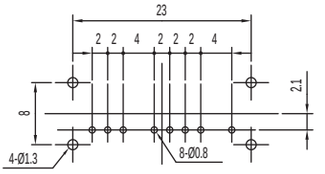

PIERCING PLAN

Specifications

CONTACT RATING: 0.3A @ 30 VDC

INITIAL CONTACT RESISTANCE: 30 m ohms max.

INSULATION RESISTANCE: 100 M ohms min.

DIELECTRIC STRENGTH: 500 V AC (50-60 Hz) between open terminals and between the frame and terminal.

OPERATING LIFE: 10,000 cycles with load

OPERATING FORCE: 250 ± 100 gf (2.45 ± 0.98N)

TRAVEL: 4 ± 0.3 mm

OPERATING TEMPERATURE: -20˚C to 70˚C

Materials

KNOB: POM

FRAME: SPCC

CONTACT: Silver clad

TERMINAL: Silver plated

SK-22H17-G DPDT NON-SHORTING

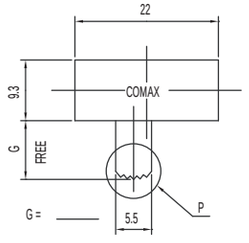

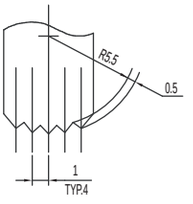

P DETAIL 2 : 1

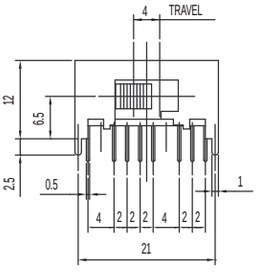

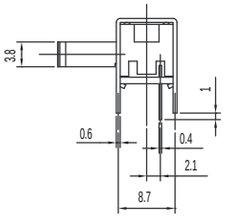

2P - 2T

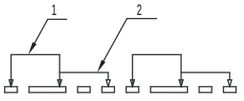

SCHEMATIC

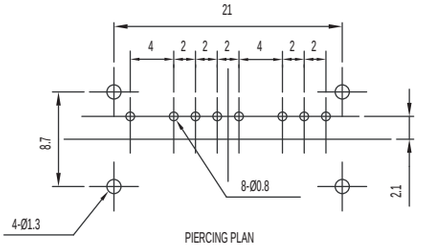

PIERCING PLAN

Specifications

CONTACT RATING: 0.3A @ 30 VDC

INITIAL CONTACT RESISTANCE: 30 m ohms max.

INSULATION RESISTANCE: 100 M ohms min.

DIELECTRIC STRENGTH: 500 V AC (50-60 Hz) between open terminals and between the frame and terminal.

OPERATING LIFE: 10,000 cycles with load

OPERATING FORCE: 250 ± 100 gf (2.45 ± 0.98N)

TRAVEL: 4 ± 0.3 mm

OPERATING TEMPERATURE: -20˚C to 70˚C

Materials

KNOB: POM

FRAME: SPCC

CONTACT: Silver clad

TERMINAL: Silver plated

SK Series
Miniature Slide Switches

SK-23D10-G 2P3T

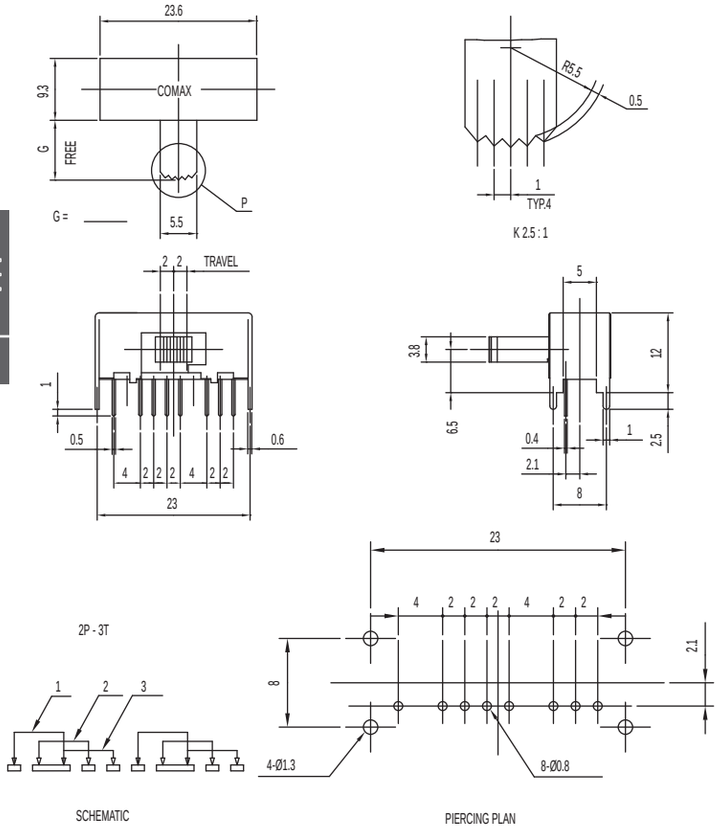

Specifications

CONTACT RATING: 0.3A @ 30 VDC

INITIAL CONTACT RESISTANCE: 30 m ohms max.

INSULATION RESISTANCE: 100 M ohms min.

DIELECTRIC STRENGTH: 500 V AC (50-60 Hz) between open terminals and between the frame and terminal.

OPERATING LIFE: 10,000 cycles with load

OPERATING FORCE: 200 ± 100 gf (1.96 ± 0.98N)
350 ± 150 gf (3.43 ± 1.47N)

TRAVEL: 2 ± 0.3 mm

OPERATING TEMPERATURE: -20˚C to 70˚C

Materials

KNOB: POM

FRAME: SPCC

CONTACT: Silver clad

TERMINAL: Silver plated

SK-23D13-G 2P3T

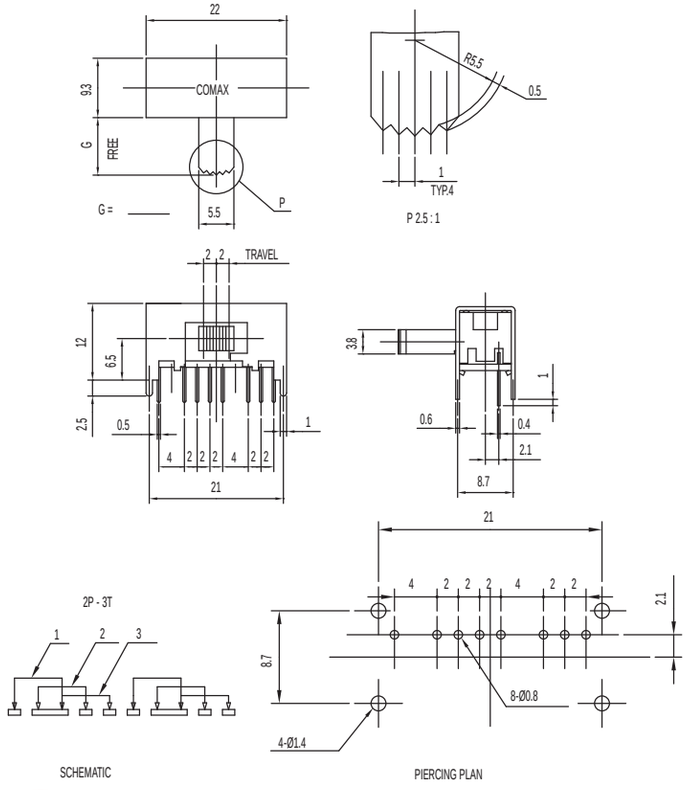

Specifications

CONTACT RATING: 0.3A @ 30 VDC

INITIAL CONTACT RESISTANCE: 30 m ohms max.

INSULATION RESISTANCE: 100 M ohms min.

DIELECTRIC STRENGTH: 500 V AC (50-60 Hz) between open terminals and between the frame and terminal.

OPERATING LIFE: 10,000 cycles with load

OPERATING FORCE: 200 ± 100 gf (1.96 ± 0.98N)
300 ± 150 gf (2.94 ± 1.47N)

TRAVEL: 2 ± 0.3 mm

OPERATING TEMPERATURE: -20˚C to 70˚C

Materials

KNOB: POM

FRAME: SPCC

CONTACT: Silver clad

TERMINAL: Silver plated

Dimensions are shown: mm
Specifications and dimensions subject to change

SK-42H01-G 4P2T NON-SHORTING

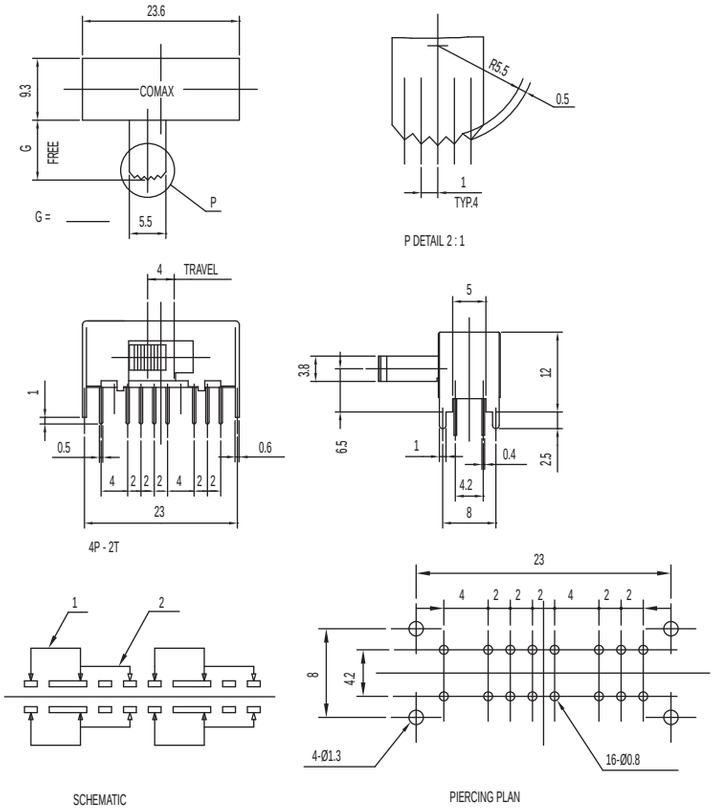

Specifications

CONTACT RATING: 0.3A @ 30 VDC

INITIAL CONTACT RESISTANCE: 30 m ohms max.

INSULATION RESISTANCE: 100 M ohms min.

DIELECTRIC STRENGTH: 500 V AC (50-60 Hz) between open terminals and between the frame and terminal.

OPERATING LIFE: 10,000 cycles with load

OPERATING FORCE: 250 ± 100 gf (2.45 ± 0.98N)

TRAVEL: 4 ± 0.3 mm

OPERATING TEMPERATURE: -20˚C to 70˚C

Materials

KNOB: POM

FRAME: SPCC

CONTACT: Silver clad

TERMINAL: Silver plated

SK-42H02-G 4P2T NON-SHORTING

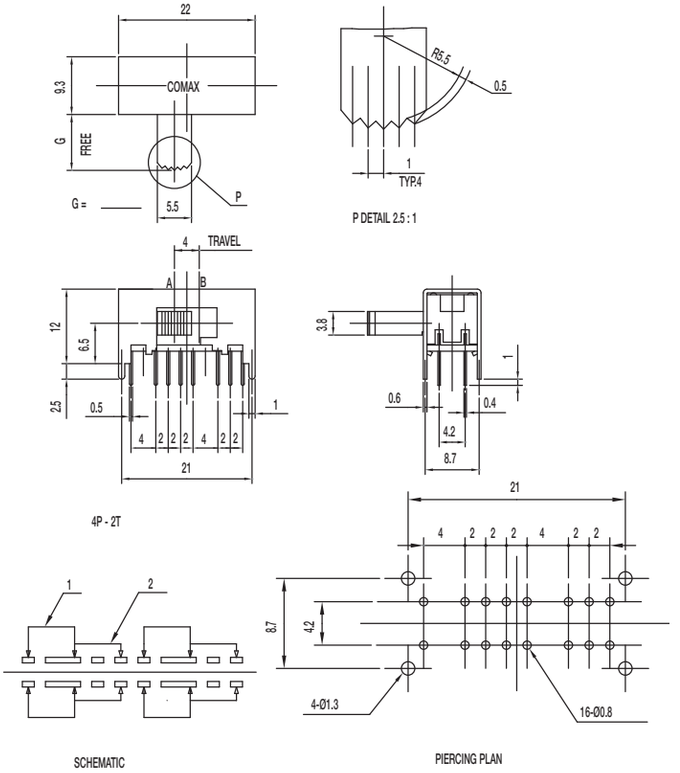

Specifications

CONTACT RATING: 0.3A @ 30 VDC

INITIAL CONTACT RESISTANCE: 30 m ohms max.

INSULATION RESISTANCE: 100 M ohms min.

DIELECTRIC STRENGTH: 500 V AC (50-60 Hz) between open terminals and between the frame and terminal.

OPERATING LIFE: 10,000 cycles with load

OPERATING FORCE: 250 ± 100 gf (2.45 ± 0.98N)

TRAVEL: 4 ± 0.3 mm

OPERATING TEMPERATURE: -20˚C to 70˚C

Materials

KNOB: POM

FRAME: SPCC

CONTACT: Silver clad

TERMINAL: Silver plated

SK Series
Miniature Slide Switches

SK-42H05 4P2T NON-SHORTING

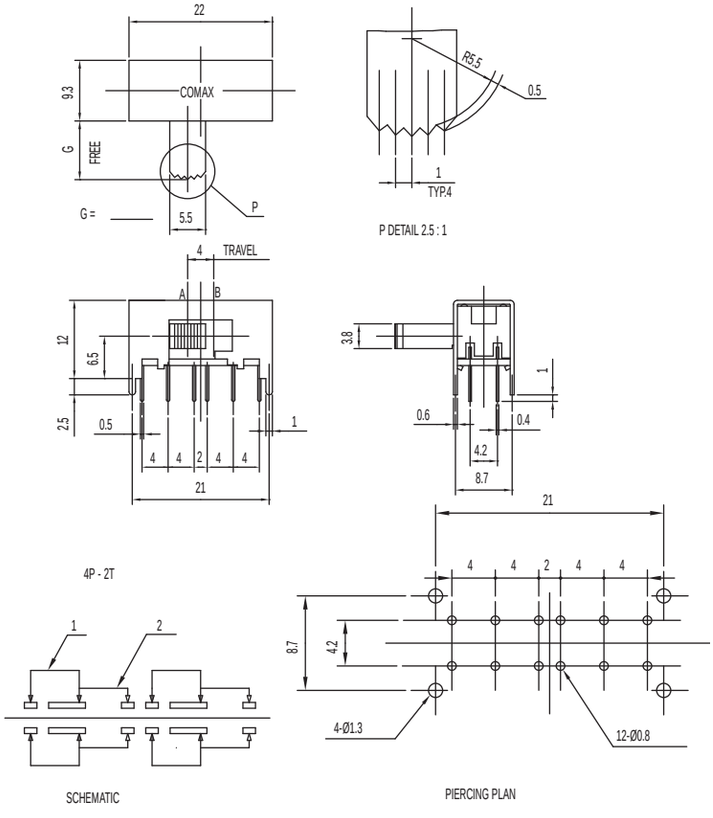

Specifications

CONTACT RATING: 0.3A @ 30 VDC

INITIAL CONTACT RESISTANCE: 30 m ohms max.

INSULATION RESISTANCE: 100 M ohms min.

DIELECTRIC STRENGTH: 500 V AC (50-60 Hz) between open terminals and between the frame and terminal.

OPERATING LIFE: 10,000 cycles with load

OPERATING FORCE: 250 ± 100 gf (2.45 ± 0.98N)

TRAVEL: 4 ± 0.3 mm

OPERATING TEMPERATURE: -20˚C to 70˚C

Materials

KNOB: POM

FRAME: SPCC

CONTACT: Silver clad

TERMINAL: Silver plated

SK-42H06-G 4P2T NON-SHORTING

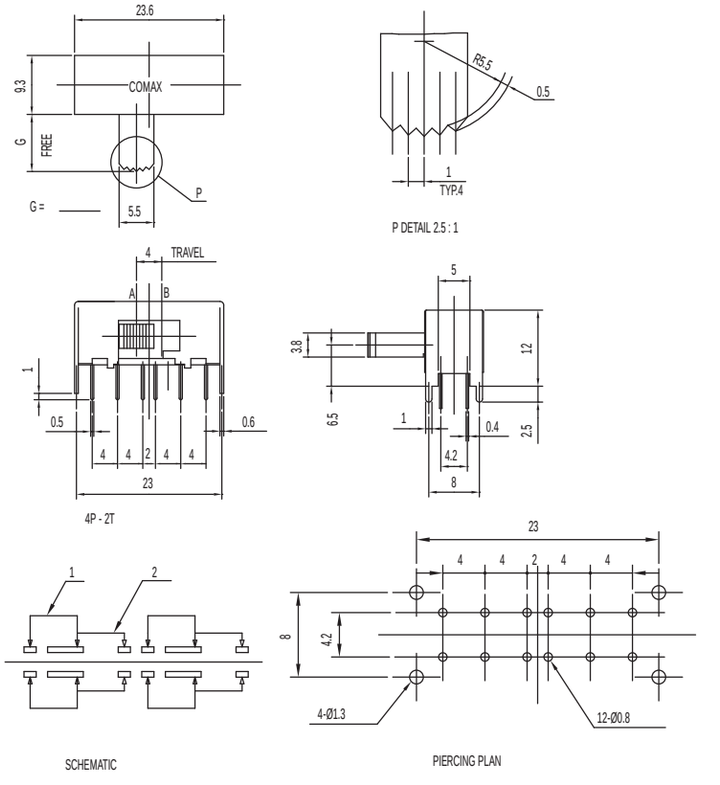

Specifications

CONTACT RATING: 0.3A @ 30 VDC

INITIAL CONTACT RESISTANCE: 30 m ohms max.

INSULATION RESISTANCE: 100 M ohms min.

DIELECTRIC STRENGTH: 500 V AC (50-60 Hz) between open terminals and between the frame and terminal.

OPERATING LIFE: 10,000 cycles with load

OPERATING FORCE: 250 ± 100 gf (2.45 ± 0.98N)
350 ± 150 gf (3.43 ± 1.47N)

TRAVEL: 4 ± 0.3 mm

OPERATING TEMPERATURE: -20˚C to 70˚C

Materials

KNOB: POM

FRAME: SPCC

CONTACT: Silver clad

TERMINAL: Silver plated

SK-43D01-G 4P3T

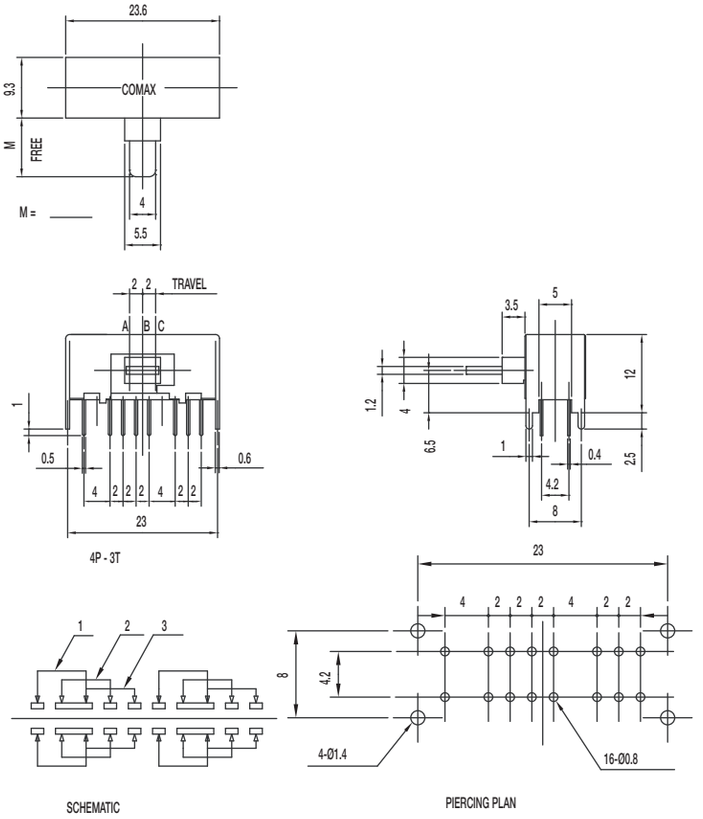

Specifications

CONTACT RATING: 0.3A @ 30 VDC
INITIAL CONTACT RESISTANCE: 30 m ohms max.
INSULATION RESISTANCE: 100 M ohms min.
DIELECTRIC STRENGTH: 500 V AC (50-60 Hz) between open terminals and between the frame and terminal.
OPERATING LIFE: 10,000 cycles with load
OPERATING FORCE: 250 ± 100 gf (2.45 ± 0.98N)
350 ± 150 gf (3.43 ± 1.47N)
TRAVEL: 2 ± 0.3 mm
OPERATING TEMPERATURE: -20˚C to 70˚C

Materials

KNOB: POM
FRAME: SPCC
CONTACT: Silver clad
TERMINAL: Silver plated

SK-43D03-G 4P3T SHORTING

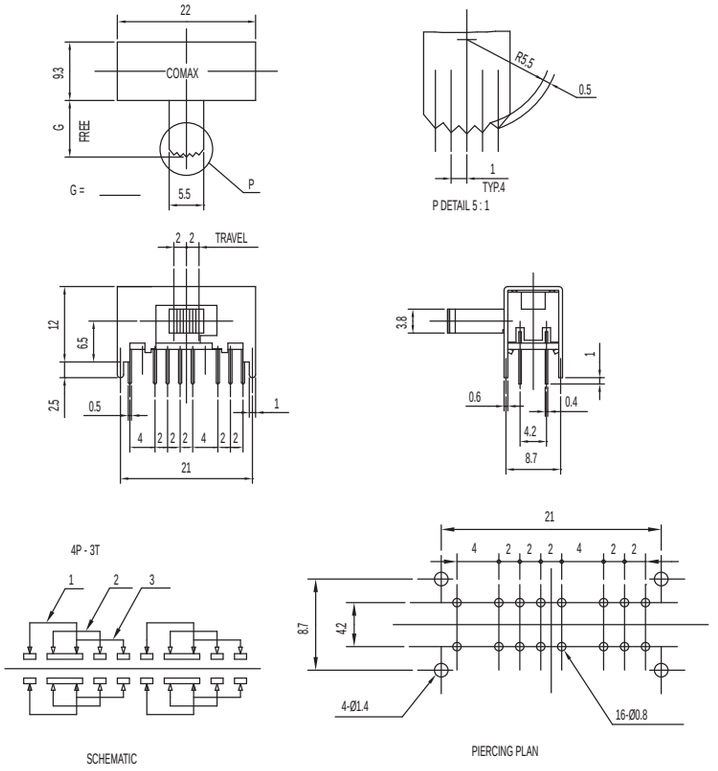

Specifications

CONTACT RATING: 0.3A @ 30 VDC
INITIAL CONTACT RESISTANCE: 30 m ohms max.
INSULATION RESISTANCE: 100 M ohms min.
DIELECTRIC STRENGTH: 500 V AC (50-60 Hz) between open terminals and between the frame and terminal.
OPERATING LIFE: 10,000 cycles with load
OPERATING FORCE: 250 ± 100 gf (2.45 ± 0.98N)
350 ± 150 gf (3.43 ± 1.47N)
TRAVEL: 2 ± 0.3 mm
OPERATING TEMPERATURE: -20˚C to 70˚C

Materials

KNOB: POM
FRAME: SPCC
CONTACT: Silver clad
TERMINAL: Silver plated

SK-44D01-G 4P4T SHORTING

Specifications

CONTACT RATING: 0.3A @ 30 VDC
INITIAL CONTACT RESISTANCE: 30 m ohms max.
INSULATION RESISTANCE: 100 M ohms min.
DIELECTRIC STRENGTH: 500 V AC (50-60 Hz) between open terminals and between the frame and terminal.
OPERATING LIFE: 10,000 cycles with load
OPERATING FORCE: 150 ± 50 gf (1.47 ± 0.49N)
200 ± 100 gf (1.96 ± 0.98N); 250 ± 100 gf (2.45 ± 0.98N)
TRAVEL: 2 ± 0.3 mm
OPERATING TEMPERATURE: -20˚C to 70˚C

Materials

KNOB: POM
FRAME: SPCC
CONTACT: Silver clad
TERMINAL: Silver plated

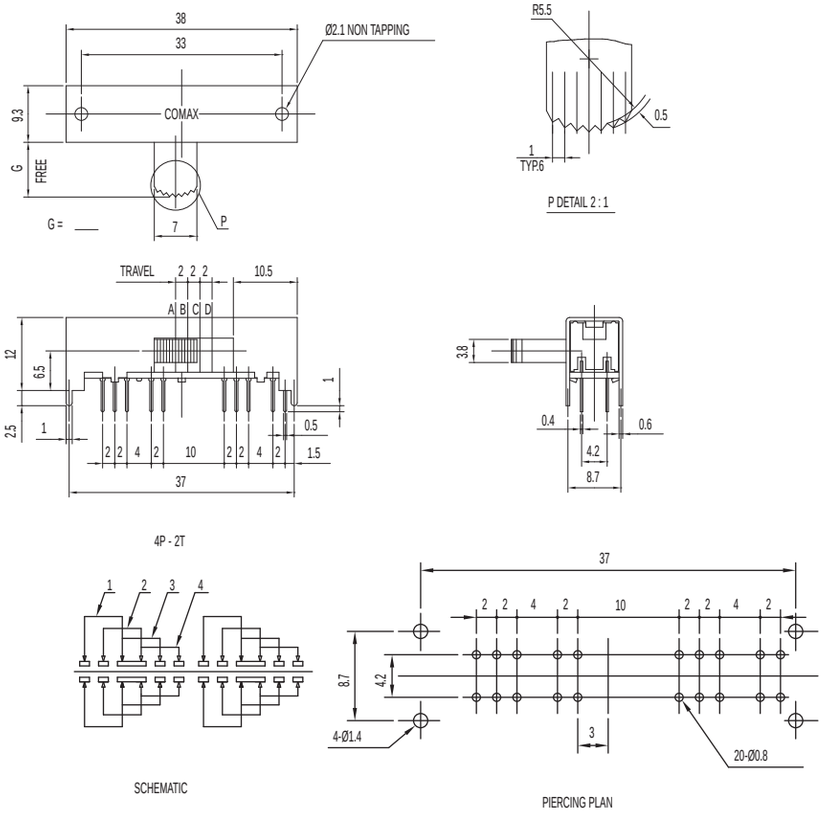

Mouser Electronics

Authorized Distributor

Click to View Pricing, Inventory, Delivery & Lifecycle Information:

C&K Components:

SK12D07G5NS SK23D33G9KGA SK12D28G2.5NS SK12D07G6NS SK22D07G4NS SK22D01SG4NSPA SK22F03G12 SK43D28G9NS SK22F02G4 SK22D06SG6NS SK22H24G4NS SK23D12G5 SK24D28G6NS SK12F14G4 SK22D01G4S SK22D01G5SPA SK22D22G7ENS SK22D01G4NSIK SK24D28G4NS SK12F28G6NS SK42F05G9 SK23D07G3 SK23D07VG3 SK23E01G10 SK24D07G7 SK23F28G9NS SK13D25G5 SK23D20G5RP SK22D07VG4NSPA SK22D01SG6NS SK12D07G4NS SK22D07G5NS SK22D37G6NS SK22H04G9NS SK22H08G5 SK23D07G2 SK23F27G9NS SK43D05SG3K SK43D05SG3KPA SK23D05SG5 SK23D19MG4.8 SK13D10G5E SK12D05G7NS SK12D07VG3NSEK SK42D28G6NS SK43D01G5 SK13D10G3E SK22F12G9 SK24F01G6 SK22H03G4 SK42D28G9NS SK43D01G8 SK43F28G9NS SK23H01G5V0 SK23D33G7KGA SK23H01G6 SK42H05G9 SK23E01G9 SK13D10G4E SK22F01G12 SK23D27G6.5K SK12D07VG4NS SK23D07WG5 SK24F28G6NS SK22D21G5NS SK12D07VG5NS SK12D26G6.5NSGY SK14D24G4 SK42D05G6NS SK43D03G8 SK22F12G10 SK23E01M8 SK24F01G7RP SK22D1605G2 SK23D24R5NS SK23D24R5NSK SK43D01G6 SK23D04G12 SK12D10G4ENSIK SK22D21G3NS SK22D28G3NS SK23D24G4RP SK23F28G6NS SK23D03G7.5RP SK23D03G8 SK12D15G6NS SK22F03G15 SK22F07G8 SK23D03G6 SK22D06SG5NS SK14D01G5L SK22D07VG3NS SK12H44G9NSGAGY2 SK22F21DG6NSS SK43D01G9 SK23D07G4PAGR SK22D06G4NS SK22D31G5 SK22H32G9NSGA SK23D07VG4RP