REVISIONS			
REV	DESCRIPTION	DATE	APPROVED
01_0	RELEASED	6/1/95	M.Y.

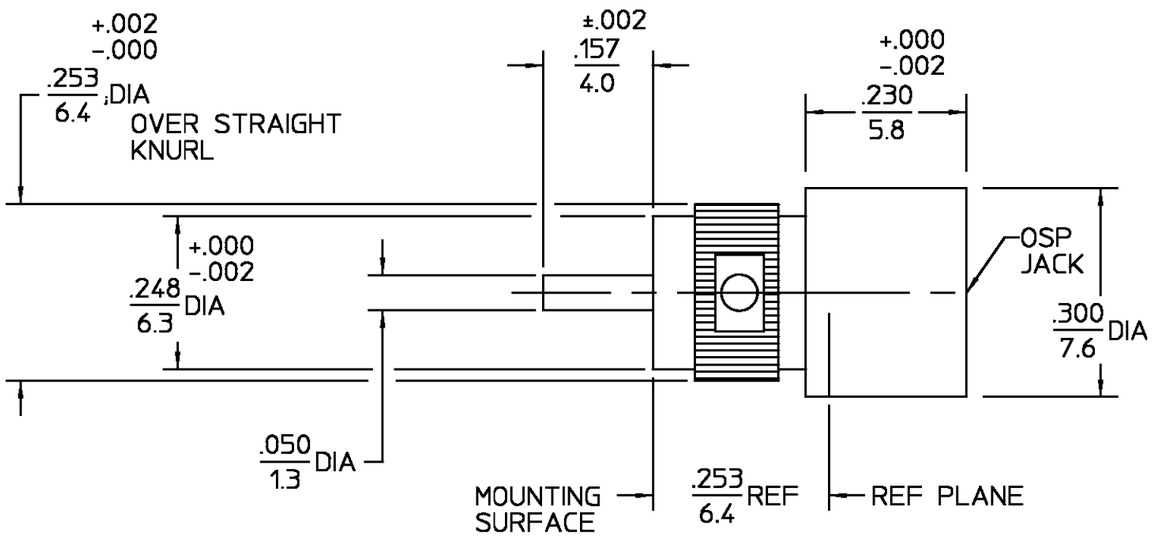

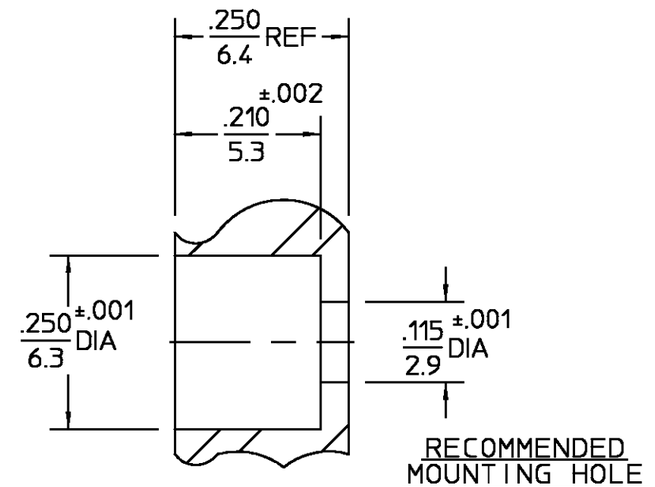

ELECTRICAL	
Nominal Impedance (Ohms)	50
Frequency Range (GHz) DC to	18
Volt Rating (VRMS MAX) @ Sea Level	500
VSWR	1.05+.005f(GHz)
Insertion Loss (dB MAX)	$.03 \times \sqrt{f(GHz)}$
RF Leakage (dB MIN) (Interface Only, Fully Mated)	-(90-f(GHz))
Corona, 70,000 Ft (VRMS MIN)	335
Dielectric Withstanding Voltage (VRMS MIN) @ Sea Level	1000
Contact Resistance (Milliohms MAX)	
Center Contact	2.0
Outer Contact	2.0
Cable to Housing	N/A
RF High Potential @ Sea Level (VRMS MIN @ 5 MHz)	1000
I.R.(Megohms MIN)	5000

MECHANICAL	
Interface Dimensions	PER M/A-COM CATALOG
Mating Characteristics:	
Insertion (MAX Lbs)	3
Withdrawal (MIN Oz)	1
Force to Engage (In-Lbs MAX)	3
& Disengage (In-Lbs MAX)	1.5
Center Contact Captivation	
Axial (Lbs)	6
Cable Retention	
Axial Force (Lbs MIN)	N/A
Torque (In-Oz MIN)	N/A
Weight (Grams)	TBD

ENVIRONMENTAL
Temperature Rating -65° to +125°C
Vibration MIL-STD-202, Method 204, Condition D
Shock MIL-STD-202, Method 213, Condition I
Thermal Shock MIL-STD-202, Method 107, Condition B
Moisture Resistance MIL-STD-202, Method 106
Corrosion - MIL-STD-202, Method 101, Condition B

COMPONENT	MATERIAL	FINISH
HOUSING	STAINLESS STEEL PER ASTM-A484 AND ASTM-A582, TYPE 303	PASSIVATE PER ASTM-A380
DIELECTRIC	TFE FLUOROCARBON PER ASTM-D-1457	N/A
CENTER CONTACT CONTACT SLEEVE	BERYLLIUM COPPER PER ASTM B 196, ALLOY C17300, CONDITION H	GOLD PLATE PER MIL-G-45204
CONTACT RING	BERYLLIUM COPPER PER ASTM B 194, ALLOY C17200, CONDITION H	GOLD PLATE PER MIL-G-45204

.XXX = in
XX.X = mm

UNLESS OTHERWISE SPECIFIED DIMENSIONS ARE IN INCHES
TOLERANCE ON
FRAC. ± 1/64 DEC. ±.005 ANGLES ± 1°

DRAWN BY JANICAR DATE 6/1/95
CHECKED BY
APP'D BY

AMP

AMP Incorporated
140 Fourth Avenue
Waltham, MA 02451-7599

These drawings and specifications are the property of Omni Spectra Incorporated and shall not be reproduced or copied or used in whole or in part as the basis for the manufacture or sale of item(s) without written permission.

USE ASS'Y PROCEDURE

NO. A.P. N/A

TITLE OSP PANEL FEEDTHRU JACK RECEPTACLE STRAIGHT TERMINAL

SIZE	CODE IDENT NO.		REV
B	26805	4558-5336-02	01_0

SCALE 5:1 SHEET 1 OF 1

CUSTOMER DRAWING

AMP PART # 1059675-1
SHEET 1 OF 1 REV A