7160_Omron 3/31/04 4:38 PM Page 1

OMRON

OMRON IDM CONTROLS, INC.

RV SYSDrive AC Inverters

High-Value, 4-in-1 AC Inverter Solutions for General-Purpose & High-End Applications

Sensing tomorrow™

RV Inverter Family Satisfies Motor Requirements from 0.5 to 550 HP

Wide Range of Sizes

Omron's full size, full-featured RV inverters combine reliable, traditional control with innovations that enhance motor life and performance. Available in 240 VAC and 480 VAC three-phase supply voltages.

For Simple & Advanced Applications

With volts/hertz for simple applications and open or closed loop vector control for complex applications, you can standardize on RV inverters to satisfy most of your motor control needs:

- Elevators
- Winders
- Conveyors
- General machinery
- Process lines
- Punch presses
- And many others

For example, the open loop vector control allows an excellent torque characteristic at a speed range of 100:1 and makes 200% of the rated torque available at 0.5 Hz. Closed loop vector control allows a speed range of 1000:1 and 200% of rated torque at zero speed.

Built-in Functions

- PID parameter calculation
- Energy savings
- Configurable digital and analog I/O
- Over-current tripping protection ensures uninterrupted operation
- Copy keypad for quick inverter setup
- Fourth generation IGBTs

Auto-tuning

In addition to standard rotational auto-tune, a new static auto-tune function eliminates the need for motor rotation to determine and set parameters.

High-slip Braking

A new high-slip braking function for intermittent braking applications shortens motor stopping time by one-third without using braking resistors. High-slip braking dissipates kinetic energy in the motor rather than in the inverter when braking resistors are used. Inverters up to 25 HP also include a built-in braking transistor.

Communications

With more inverters connected via fieldbus networks, Omron has provided the user a built-in RS-485/422 Modbus communications protocol and made available optional cards for DeviceNet and Profibus. Now it is simpler than ever to send speed references and operation commands via the system and monitor inverter status.

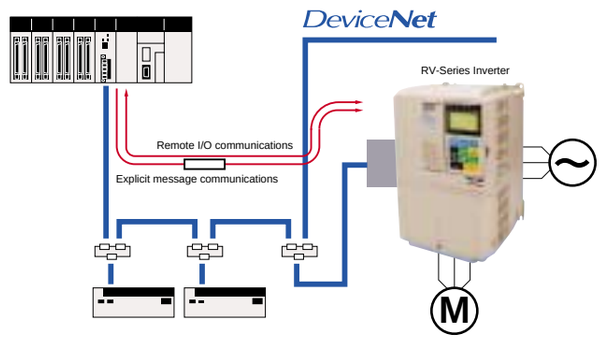

Global Construction

The RV was designed and manufactured to comply with UL, cUL standards, plus CE standards for Europe.

Low Noise

All RV models have conventional high-carrier PWM control as well as a unique, low-carrier PWM control to suppress noise. Select the control mode based on the function and application. For constant torque applications, the inverter automatically applies the low-carrier PWM control mode.

All RV models above 18.5 kW include a DC link reactor as standard. This reduces harmonic distortion in drive systems and improves the system power factor. Also, 12-pulse configuration can be set on the same units, since all the necessary equipment is built in, except the transformer that should be chosen to suit specific project requirements. Optional EMI/RFI filters are available to minimize high frequency electrical noise.

Easy to Maintain & Inspect

Setup is simplified through a quick program mode and the standard keypad doubles as a copy unit to set multiple drives. The removable control circuit terminal strip makes wiring simpler for installation and maintenance. Screw terminals are used throughout to provide reliable connection. The cooling fan automatically switches off when not required, prolonging fan life. When the fan does require changing, the process is simplified through a detachable fan design. The face cover is a split design, providing safe access to control terminals.

Specifications

Voltage Class			240 V three-phase																		
Part Number RV-			A												B						
			2004	2007	2015	2022	2037	2055	2075	2110	2150	2185	2220	2300	2370	2450	2550	2750	2900	211K
Output	Heavy Duty	Horsepower (HP)*	0.5	1	2	3	5	7.5	10	15	20	25	30	40	50	60	75	100	125	150
		Rated Output Current (A)*	3.2	4.1	7	9.6	15	23	31	45	58	71	85	115	145	180	215	283	346	415
	Normal Duty	Horsepower (HP)*	0.5/0.75	1	2	3	5	7.5	10	15	20	25	30	40	50/60	75	–	100/125	150	–
		Rated Output Current (A)*	3.6	4.6	7.8	10.8	16.8	23	31	46.2	59.4	74.8	88	115	162	192	215	312	360	415
	Max. Output Voltage (V)		3-phase, 200 to 240 VAC (Depends on input voltage)																		
	Max. Output Frequency (Hz)		CT (low carrier, constant torque applications): 300 Hz – Heavy duty VT (high carrier, variable torque applications): 400 Hz – Normal duty																		
Power Supply	Rated Voltage (V) and Frequency (Hz)		3-phase, 200 to 240 VAC, 50/60 Hz												3-phase, 200 to 230 VAC, 50/60 Hz Cooling Fan: 200 to 220 VAC at 50 Hz, 200 to 230 VAC at 60 Hz						
	Allowable Voltage Fluctuation		-15% to +10%																		
	Allowable Frequency Fluctuation		±5%																		
	Measures for Power Supply Harmonics		Optional DC reactor										Built-in DC reactor								
	Protective Enclosure		Enclosed, wall-mounting (NEMA1)												Open chassis (equivalent to IP00)						

Voltage Class			480 V three-phase																				
Part Number RV-			A														B						
			4004	4007	4015	4022	4037	4055	4075	4110	4150	4185	4220	4300	4370	4450	4550	4750	4900	413K	416K	418K	422K	430K
Output	Heavy Duty	Horsepower (HP)*	0.75	1	2	3	5	7.5	10	15	20	25	30	40	50	60	75	100	150	200	250	300	400	500/550
		Rated Output Current (A)*	1.8	2.1	3.7	5.3	7.6	12.5	17	24	31	39	45	60	75	91	112	150	180	260	304	370	506	675
	Normal Duty	Horsepower (HP)*	.5/.75	1	1.5/2	3	5	7.5	10	15/20	25	30	–	40/50	60	75	100	125	150	–	250	300/350	400/450	500/550
		Rated Output Current (A)*	1.8	2.1	3.7	5.3	7.6	12.5	17	27	34	40	50.4	67.2	77	96	125	156	180	260	304	414	515	675
	Max. Output Voltage (V)		3-phase, 380 to 480 VAC (Depends on input voltage)																				
	Max. Output Frequency (Hz)		CT (low carrier, fixed torque applications): 300 Hz – Heavy duty VT (high carrier, variable torque applications): 400 Hz – Normal duty																				
Power Supply	Rated Voltage (V) and Frequency (Hz)		3-phase, 380 to 480 VAC, 50/60 Hz																				
	Allowable Voltage Fluctuation		-15% to +10%																				
	Allowable Frequency Fluctuation		±5%																				
	Measures for Power Supply Harmonics		Optional DC reactor											Built-in DC reactor									
	Protective Enclosure		Enclosed, wall-mounting (NEMA1)															Open chassis (equivalent to IP00)					

*Note: The difference between Heavy Duty ratings and the Normal Duty ratings for the drive are the rated input and output current, overload capacity, carrier frequency, current limit, and maximum output frequency. Parameter C6-01 must be set to value of "0" for Heavy Duty ratings and "2" for Normal Duty ratings. Factory default is Heavy Duty (C6-01=0).

Common Specifications

		Common Specifications
Control Characteristics	Control Method	Sine wave PWM; Closed loop flux vector, Open loop vector control, V/f control, V/f with PG control (switched by parameter setting)
	Speed Control Range	200:1 (1000:1 with PG)
	Speed Control Accuracy	±0.2% (25°C ± 10°C) (±0.02% with PG)
	Speed Control Response	5 Hz (30 Hz with PG)
	Torque Characteristics	Heavy duty/CT selected (low carrier, fixed torque applications): 150% /0.5 Hz (Open or closed loop vector control) Normal duty/VT selected (high carrier, variable torque applications): 120%/0.5 Hz
	Frequency Control Range	0.01 to 300 Hz (CT selected.), 0.01 to 400 Hz (VT selected.)
	Frequency Accuracy (Temperature Characteristics)	Digital references: ± 0.01% (-10°C to +40°C) Analog references: ±0.1% (25°C ±10°C)
	Frequency Setting Resolution	Digital references: 0.01 Hz Analog references: 0.03 Hz/60 Hz (10 bit with sign)
	Output Frequency Resolution	0.01 Hz
	Overload Capacity and Maximum Current (*2)	Heavy duty/CT selected: 150% of rated output current per minute (*1) Normal duty/VT selected: Approximately 110% of rated output current per minute
	Frequency Setting Signal	Voltage input of 0 to ±10 or 0 to 10 (20 kΩ) VDC or current input of 4 to 20 mA
	Acceleration/Deceleration Time	0.01 to 6000.0 s (4 selectable combinations of independent acceleration and deceleration settings)
	Braking Torque	Approximately 20% (Approximately 125% with Braking Resistor option) (100% + with High Slip Braking)
	Main Control Functions	Auto restart after momentary power loss, speed searches, overtorque detection, torque limits, 16-speed control (maximum), acceleration/deceleration time changes, S-curve acceleration/deceleration, 2-wire or 3-wire sequence, autotuning (rotational or stationary), dwell functions, cooling fan ON/OFF control, slip compensation, torque compensation, jump frequencies, upper and lower frequency limits, DC injection braking for starting and stopping, high-slip braking, PID control (with sleep function), energy-saving control, RS-485/422A communications (Conforms to MODBUS,19.2 kbps maximum), fault reset, and function copying.
Protective Functions	Motor Protection	Protection by electronic thermal overload relay.
	Overcurrent Protection	Instantaneous protection. Stops at approximately 200% of rated output current.
	Overload Protection	Heavy duty/CT selected (low carrier, fixed torque applications): 150% of rated output current per minute (not for 110 kW) Normal duty/VT selected (high carrier, variable torque applications): Approximately 110% of rated output current per minute
	Overvoltage Protection	200 Class Inverter: Stops when main-circuit DC voltage is above 410 V. 400 Class Inverter: Stops when main-circuit DC voltage is above 820 V.
	Undervoltage Protection	200 Class Inverter: Stops when main-circuit DC voltage is below 190 V. 400 Class Inverter: Stops when main-circuit DC voltage is below 380 V.
	Momentary Power Loss Ridethru	Stops for 15 ms or more. By selecting the momentary power loss method, operation can be continued if power is restored within 2 s.
	Cooling Fin Overheating	Protection by thermistor.
	Grounding Protection	Protection by electronic circuits. (Overcurrent level)
	Charge Indicator	Lit when the main circuit DC voltage is approximately 50 V or more.
Environmental Conditions	Application Site	Indoor (no corrosive gas, dust, etc.)
	Ambient Operating Temperature	-10°C to 40°C (Closed wall-mounted type) / 10°C to 45°C (Open chassis type)
	Ambient Operating Humidity	95% max. (with no condensation)
	Storage Temperature	-20°C to + 60°C (short-term temperature during transportation)
	Altitude	3300 ft (1000 m) max.
	Vibration	10 to 20 Hz, 9.8 m/s² max.; 20 to 50 Hz, 2 m/s² max, oscillation vibration of 20 Hz
	Protective Enclosure	Enclosed, wall-mounting (NEMA1: Equivalent to IP20) or Mounted in a panel (equivalent to IP00)

*1: Not including the 200 V Class Inverter for 110 kW and the 400 V Class Inverters for 220 and 300 kW.

*2: Increase the Inverter capacity if loads exceeding these current values are expected. Rotational autotuning is required to obtain the specifications labeled with PG or flux vector.

RV-□□□□□

RV-Series Inverter

Maximum motor horsepower (Heavy duty HP ratings)

	240 V	480 V		240 V	480 V
004	0.5	0.75	370	50	50
007	1	1	450	60	60
015	2	2	550	75	75
022	3	3	750	100	100
037	5	5	900	125	125-150
055	7.5	7.5	11K	150	–
075	10	10	13K	–	200
110	15	15	16K	–	250
150	20	20	18K	–	300
185	25	25	22K	–	400
220	30	30	30K	–	500-550
300	40	40			

Voltage class

2	Three-phase 240 VAC (200 V Class)
4	Three-phase 480 VAC (400 V Class)

Degree of protection

A	Enclosed wall mounted (IP20 or higher)
B	Open chassis

Accessories

Where you find blanks in the part number, Contact Omron IDM Controls for the complete part number for the model that exactly matches your inverter.

Name	Purpose	Description	Part Number
Fans	Plug-in replacement for fan installed in inverter replaces the cooling fan when service time has come or a cooling fan fault (FAN) alarm has been displayed.	For 200 V models	3G3IV-PFAN☐
		For 400 V models	3G3IV-PFAN☐
Digital operator	Perform simple programming and diagnostics from the front panel.	LCD display digital operator displays messages and programming codes.	PJVOP160
Digital operator cable	Extension cable allows remote use of the digital operator.	1 m length	010.35.327
		3 m length	010.35.328
Analog monitor card	Makes it possible to use the analog output of the terminals as a control signal.	Two points; Output resolution of 1/2,048 (output voltage of 0 to ±10 VDC)	AO-12
Isolated analog monitor card	Makes it possible to use the analog output of the terminals as a control signal.	Output voltage of 0 to ±10 VDC; Current: 0 to 20 mA, 4 to 20 mA	AO-12B2
120 VAC interface card	Makes it possible to use 120 VAC control wiring on inverter inputs.	Connects to inverter input terminals.	UTC00040
Pulse generator (PG) speed control cards	Provide feedback to the inverter from encoders and other devices.	Phase-A (single-phase) pulse input and open collector output for V/f control with a PG. Maximum response frequency: 30 kHz, with pulse monitor output.	PG-A2
		Phase A/B pulse inputs and open collector output for flux vector control. Maximum response frequency: 30 kHz, with pulse monitor output.	PG-B2
		Phase-A (single-phase) pulse input and line driver output (RS-422) for V/f control with a PG. Maximum response frequency: 300 kHz with pulse monitor output.	PG-D2
		Dual feedback inputs for use with 2 motors. Phase A/B/Z pulse inputs and line driver output (RS-422) for flux vector control. Maximum response frequency: 300 kHz with pulse monitor output.	PG-W2
		Phase A/B/Z pulse inputs and line driver output (RS-422) for flux vector control. Maximum response frequency: 300 kHz, with pulse monitor output.	PG-X2
DeviceNet communications card (See note 1)	Communicate with any DeviceNet master; registers inverter as a DeviceNet slave device.	Integrate inverter drive control into a DeviceNet network with via programmable controller- or PC-based master.	3G3RV-PDRT2
Input noise filter	Controls noise generated by the inverter so it does not enter the power supply.	Connects to the motor output side. Fill in the blank with the motor output power rating in kW to match your drive.	3G3RV-PFI☐(CE) RF☐(NON-CE)
Braking unit	Reduces the deceleration time of the motor. Used with braking resistor below. Not required with inverters of 7.5 kW or less for 200 V types, or 15 kW or less for 400 V types	For 200 V models	CDBR-2☐B
		For 400 V models	CDBR-4☐B
Braking resistor (See Note 2)	Consumes the regenerative motor energy with a resistor to reduce deceleration time (duty cycle: 3% ED).	For 200 V models	3G3IV-PLKEB2☐
		For 400 V models	3G3IV-PLKEB4☐
AC reactor	Used to control harmonics generated by the inverter or when the power supply capacity is greatly larger than the inverter's capacity. Also used to increase the power factor.	For 200 V models	RL-☐
		For 400 V models	RL-☐
DC reactor	Used to control harmonics generated by the inverter and to improve the input power factor of the inverter.	All inverters of 18.5 kW or higher contain built-in DC reactors. For 18.5 kW inverters and smaller, a DC reactor is optional.	☐RB00☐

Notes:
1. If using a DeviceNet master from a manufacturer other than Omron, download the EDS file for RV inverters from the Omron IDM Controls (www.idmcontrols.com) website.
2. Not required with inverters of 3.7 kW or less for 200 V models, or for inverters of 2.2 kW or less for 400 V models.

Dimensions

Open Chassis Inverters (IP00)

Figure A

200-V class inverters of 30 to 40 HP
400-V class inverters of 30 to 75 HP

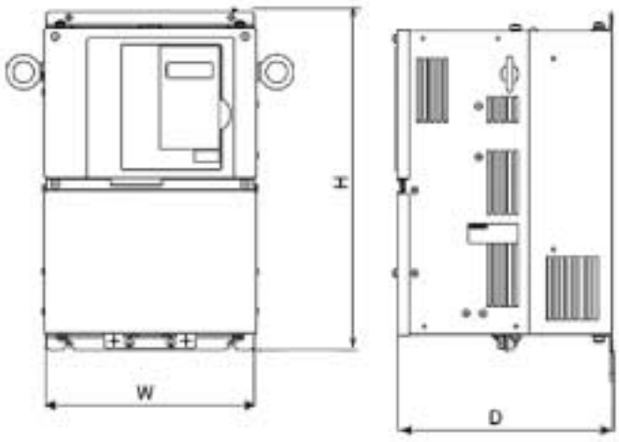

Figure B

200-V class inverters of 50 to 150 HP
400-V class inverters of 100 to 250 HP

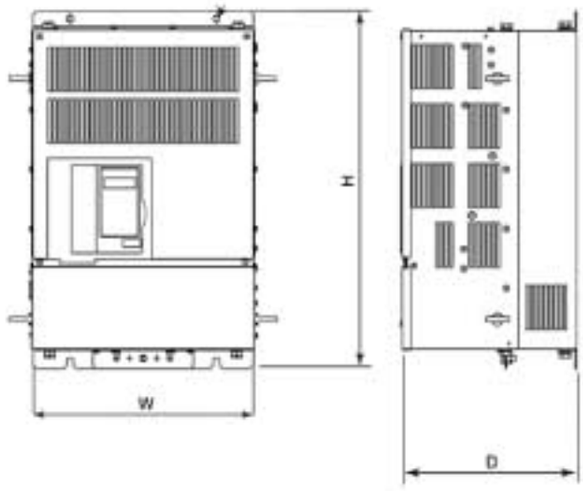

Enclosed Wall-mounted Inverters (NEMA 1)

Figure C

200-V / 400-V class inverters of 0.5 to 25 HP

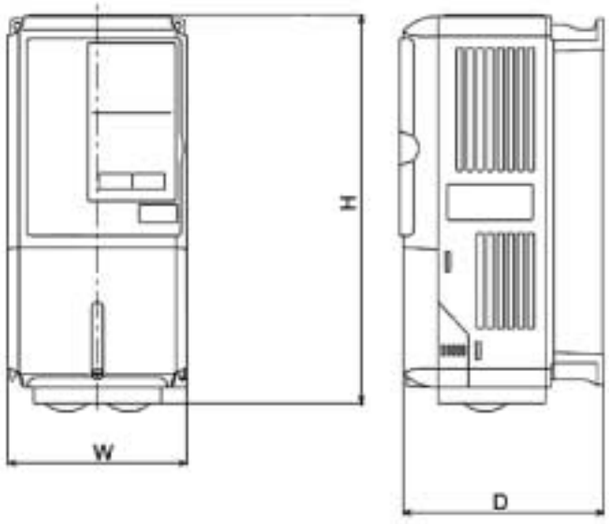

Figure D

200-V class inverters of 30 to 100 HP
400-V class inverters of 30 to 250 HP

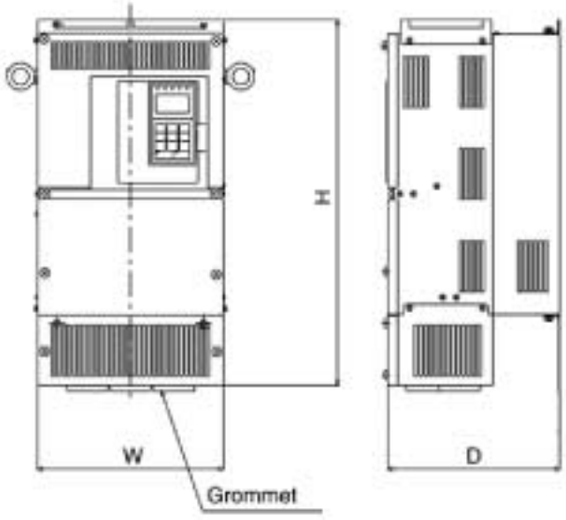

Note: Please refer to the figure code on the next dimensions page for the standard enclosure type.

Dimensions

Voltage Class	Max. Motor Output (Heavy Duty HP)	Model Number	Figure	Enclosure Type	Dimensions: inches (mm) W	H	D	Approx. Weight (lbs)	Heat Loss (W) External	Internal	Total Heat Loss	Cooling Method
240 V	0.5	RV-A2004	C	NEMA 1					20	39	59	Natural
3-phase	1	RV-A2007	C				6.18 (157)	6.61	27	42	69	
	2	RV-A2015	C		5.51 (140)	11.02 (280)			50	50	100	
	3	RV-A2022	C						70	59	129	
	5	RV-A2037	C				6.97 (177)	8.82	112	74	186	Fan
	7.5	RV-A2055	C						164	84	248	
	10	RV-A2075	C		7.87 (200)	11.81 (300)	7.76 (197)	13.23	219	113	332	
	15	RV-A2110	C			12.20 (310)		15.43	374	170	544	
	20	RV-A2150	C		9.45 (240)	13.78 (350)	8.15 (207)	24.25	429	183	612	
	25	RV-A2185	C			14.96 (380)			501	211	712	
	30	RV-A2220	D		10.00 (255)	21.06 (535)	10.16 (258)	46.30	586	274	860	
	40	RV-A2300	D		10.99 (279)	24.21 (615)		52.91	865	352	1217	
	50	RV-B2370	A	Open	14.93 (379)	23.62 (600)	11.73 (298)	125.66	1015	411	1428	
	60	RV-B2450	A				12.91 (328)	138.89	1266	505	1771	
	75	RV-B2550	A		17.88 (454)	28.54 (725)	13.70 (348)	189.60	1588	619	2206	
	100	RV-B2750	B					191.80	2019	838	997	
	125	RV-B2900	B		19.89 (505)	33.46 (850)	14.09 (358)	238.10	2437	997	3434	
	150	RV-B211K	B		22.80 (575)	34.84 (885)	14.88 (378)	330.69	2733	1242	3975	
480 V	0.75	RV-A4004	C	NEMA 1					14	39	53	Natural
3-phase	1	RV-A4007	C				6.18 (157)	6.61	17	41	58	
	2	RV-A4015	C		5.51 (140)	11.81 (280)			36	48	84	
	3	RV-A4022	C						59	56	115	Fan
	5	RV-A4037	C				6.97 (177)	8.82	80	68	148	
	7.5	RV-A4055	C						127	82	209	
	10	RV-A4075	C		7.87 (200)	11.81 (300)	7.76 (197)	13.23	193	114	307	
	15	RV-A4110	C						252	158	410	
	20	RV-A4150	C		9.45 (240)	13.78 (350)	8.15 (207)	22.05	326	172	498	
	25	RV-A4185	C						426	208	634	
	30	RV-A4220	D		11.02 (280)	21.06 (535)	10.16 (258)	46.30	466	259	725	
	40	RV-A4300	D						678	317	995	
	50	RV-A4370	D			25.00 (635)			784	360	1144	
	60	RV-A4450	D		12.96 (329)	28.15 (715)	11.14 (283)	79.37	901	415	1316	
	75	RV-A4550	D			21.65 (550)			1203	495	1698	
	100	RV-B4750	B	Open	17.88 (454)	28.54 (725)	13.70 (348)	194.01	1399	575	1974	
	125-150	RV-B4900	B					196.21	1614	671	2285	
	200	RV-B413K	B		19.89 (505)	33.46 (850)	14.09 (358)	264.55	2388	1002	3390	
	250	RV-B416K	B		22.80 (575)	36.06 (916)	14.88 (378)	352.74	2791	1147	3938	
	300	RV-B418K	B		27.95 (710)	51.38 (1305)		572	3237	1372	4609	
	400	RV-B422K	B				16.26 (413)	616	3740	1537	5277	
	500-550	RV-B430K	B		36.06 (916)	58.07 (1475)		891	5838	2320	8158	

Wiring Diagram

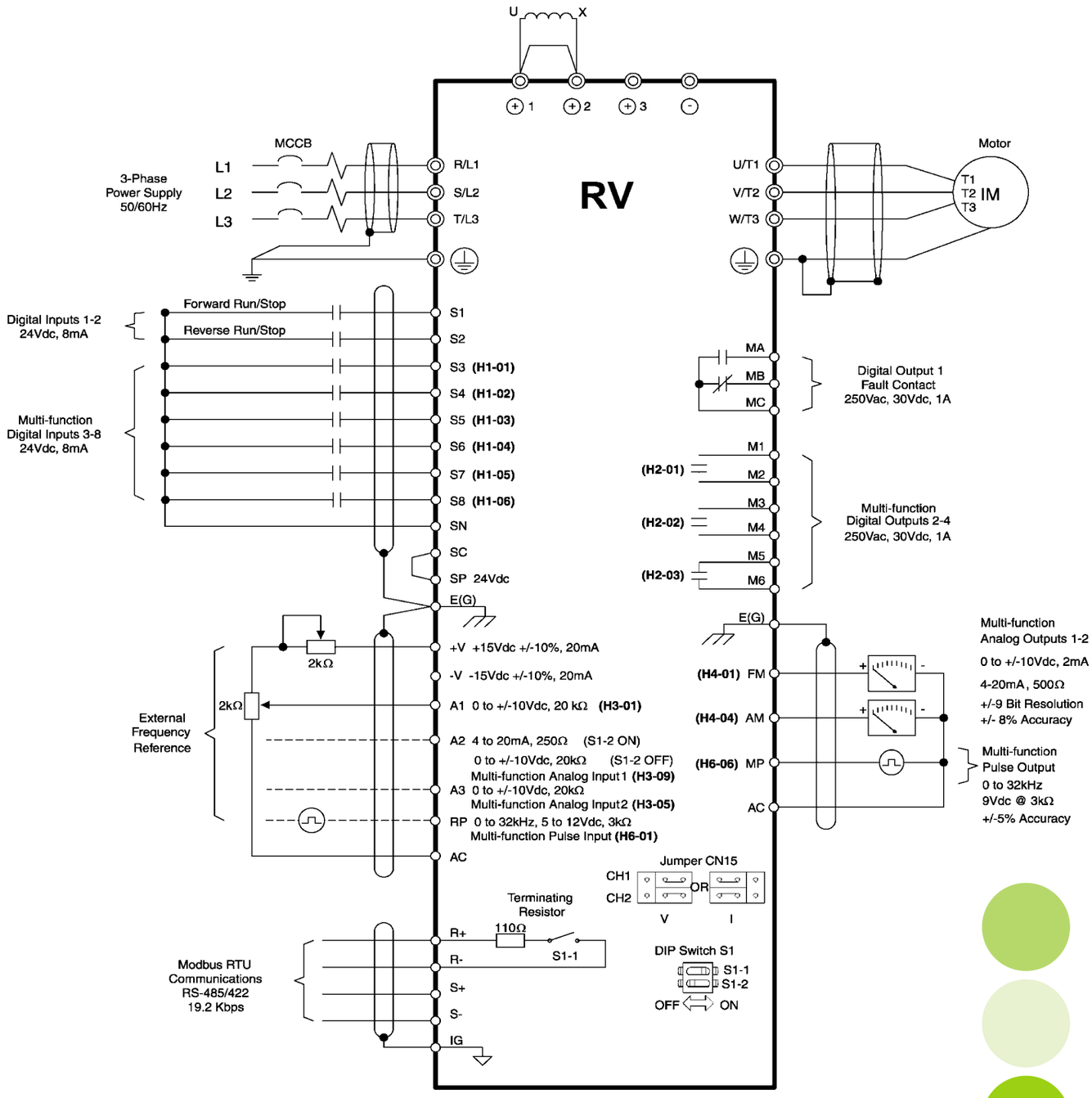

OMRON IDM CONTROLS INC.
Houston, TX
www.idmcontrols.com

OMRON ELECTRONICS LLC
Schaumburg, IL
www.omron.com/oei

OMRON CANADA, INC.
Toronto, Ontario
www.omron.ca

I01I-E-02 4/04/10M
© 2004 OMRON ELECTRONICS LLC
Printed in the U.S.A.

OMRON IDM HEADQUARTERS
800.395.4106 or **713.849.1900**

UNITED STATES REGIONAL SALES OFFICE
847-843-7900

CANADA REGIONAL SALES OFFICE
416.286.6465

MEXICO SALES OFFICES
Florida **954.227.2121** Ciudad Juarez **656.623.7083**
Mexico, D.F. **555.534.1195** Monterrey, N.L. **818.377.4281**

BRAZIL SALES OFFICE
55.11.5564.6488

ARGENTINA SALES OFFICE - CONO SUR
114.590.2408

AUTHORIZED DISTRIBUTOR: