PART NAME	HAND HELD ENCLOSURE (STYLE D)	PART No.	HH-3470 & HH-3471	REV. DATE	10-29-08

ALL DIMENSIONS HAVE ±0.015 TOLERANCE

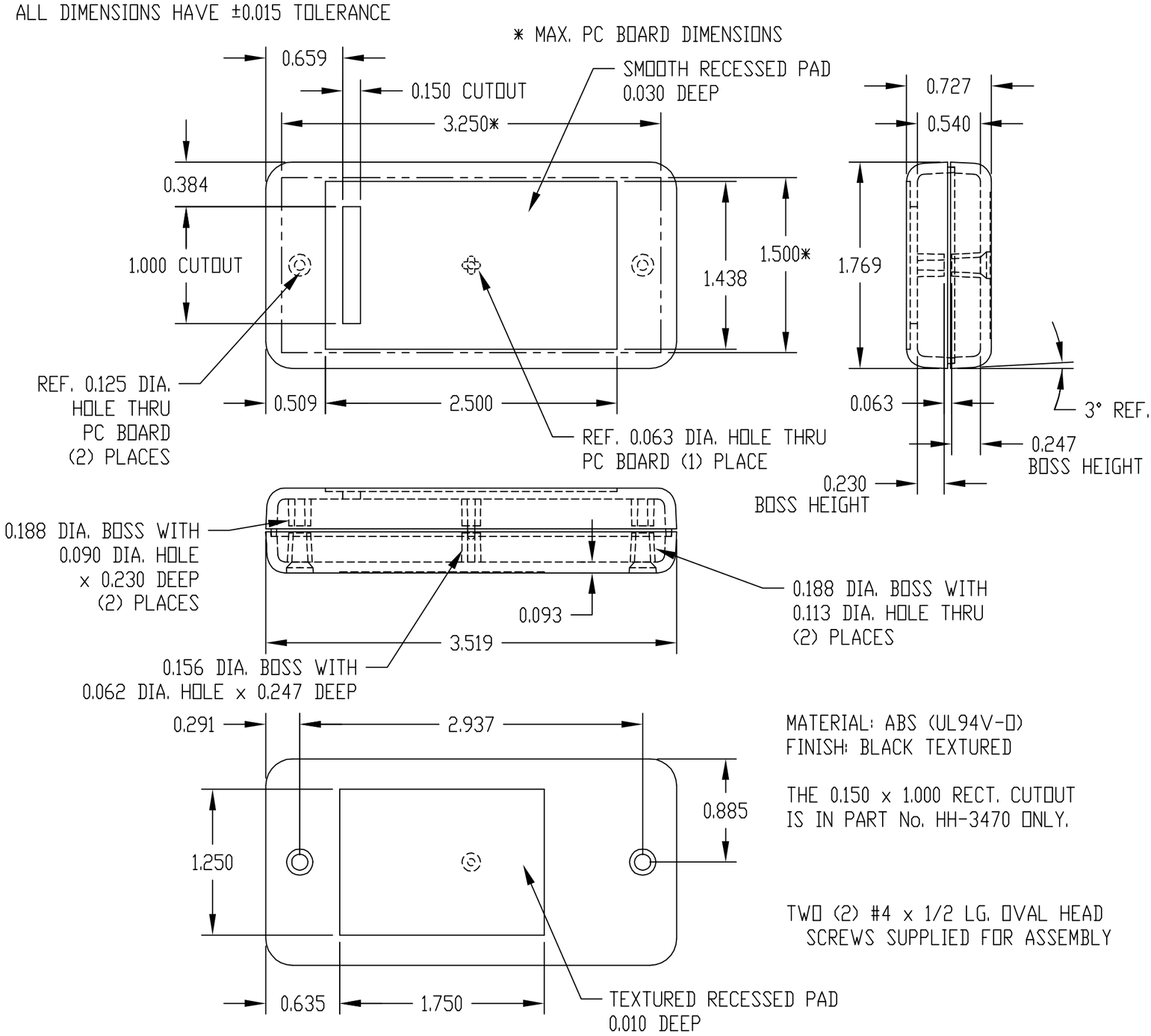

MATERIAL: ABS (UL94V-0)
FINISH: BLACK TEXTURED

THE 0.150 x 1.000 RECT. CUTOUT IS IN PART No. HH-3470 ONLY.

TWO (2) #4 x 1/2 LG. OVAL HEAD SCREWS SUPPLIED FOR ASSEMBLY

PART NAME	HAND HELD KEYRING (STYLE E)	PART No.	HH-3490	REV. DATE	10-29-08

ALL DIMENSIONS HAVE ±0.015 TOLERANCE

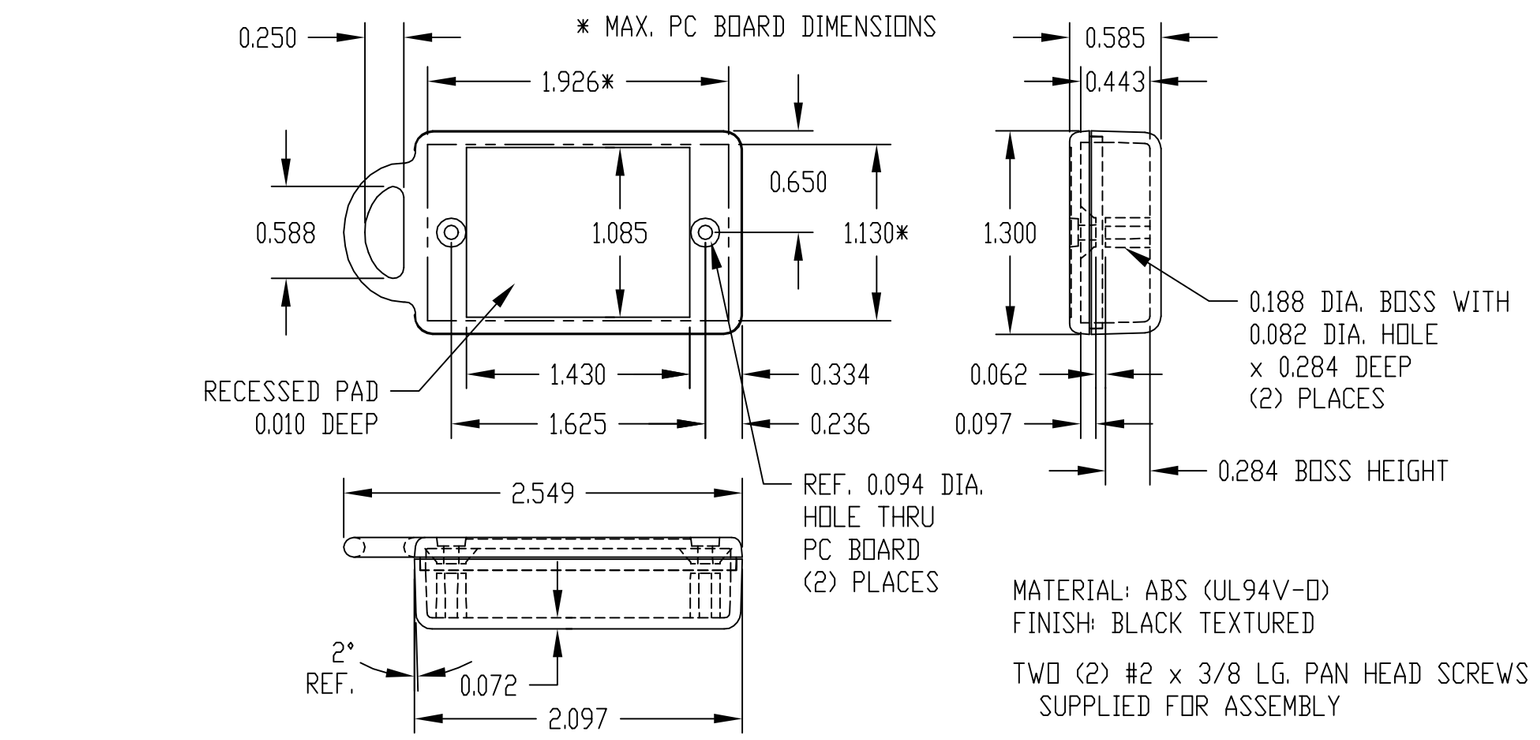

MATERIAL: ABS (UL94V-0)
FINISH: BLACK TEXTURED

TWO (2) #2 x 3/8 LG. PAN HEAD SCREWS SUPPLIED FOR ASSEMBLY