| REV. | DESCRIPTION | DATE |
|---|---|---|
| A | RELEASE | 2012.11.12 |

NOTES:
Insulator Material: PBT, UL 94V-0
Contact Plating:flash gold
Contact Material: Phosphor Bronze

Current Rating : 1A AC,DC
Contact Resistance: 20MΩ Max.
Dielectric Withstanding: AC 500V
Insulator Resistance: 1000MΩ Min.
Operating Temp.: -40°C~+105°C

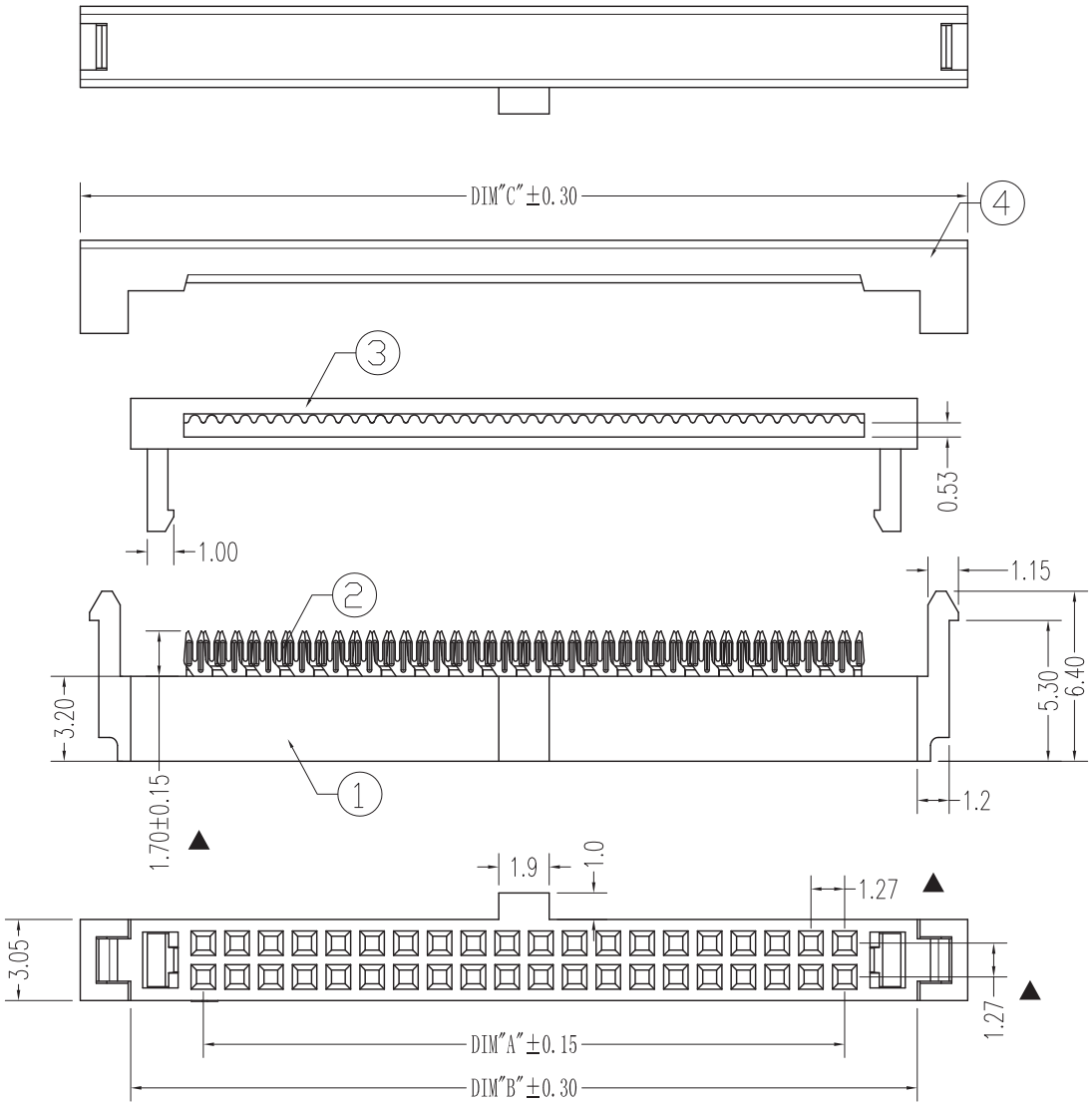


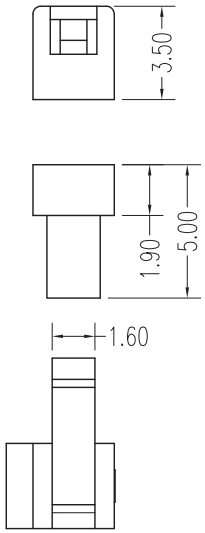


| NUMBER OF POSITIONS | DIMENSION | | |
|---|---|---|---|
| | A | B | C |
| 06 | 2.54 | 8.00 | 11.80 |
| 08 | 3.81 | 9.27 | 13.07 |
| 10 | 5.08 | 10.54 | 14.34 |
| 12 | 6.35 | 11.81 | 15.61 |
| 14 | 7.62 | 13.08 | 16.88 |
| 16 | 8.89 | 14.35 | 18.15 |
| 20 | 11.43 | 16.89 | 20.69 |
| 24 | 13.97 | 19.43 | 23.23 |
| 26 | 15.24 | 20.70 | 24.50 |
| 30 | 17.78 | 23.24 | 27.04 |
| 34 | 20.32 | 25.78 | 29.58 |
| 40 | 24.13 | 29.59 | 33.39 |
| 44 | 26.67 | 32.13 | 35.93 |
| 50 | 30.48 | 35.94 | 39.74 |
| 60 | 36.83 | 42.29 | 46.09 |
| 64 | 39.37 | 44.83 | 48.63 |
| 66 | 40.64 | 46.10 | 49.90 |
| 68 | 41.91 | 47.37 | 51.17 |
| 70 | 43.18 | 48.64 | 52.44 |
| 74 | 45.72 | 51.18 | 54.98 |
| 76 | 46.99 | 52.45 | 56.25 |
| 80 | 49.53 | 54.99 | 58.79 |

| Mating Part Number | | |
|---|---|---|
| 3221-ALL | | |
| | | |

| UNLESS TOLERANCE | | | |
|---|---|---|---|
| GENERAL | | ANGLE | |
| X. | ± 0.30 | X.° | ± 3.0° |
| .X | ± 0.20 | .X° | ± 2.0° |
| .XX | ± 0.15 | .XX° | ± 1.0° |
| .XXX | ± 0.10 | .XXX° | ± 0.5° |

| | |
|---|---|
| DRAW BY | |
| DESIGN BY | |
| CHECK BY | |
| APPROVE BY | |

| SCALE | SHEET | UNIT |
|---|---|---|
| 1:1 | 1/1 | MM |

CnC Tech,LLC

Part NO.
3230-XX-0103-00

DRW NO:

REV: A