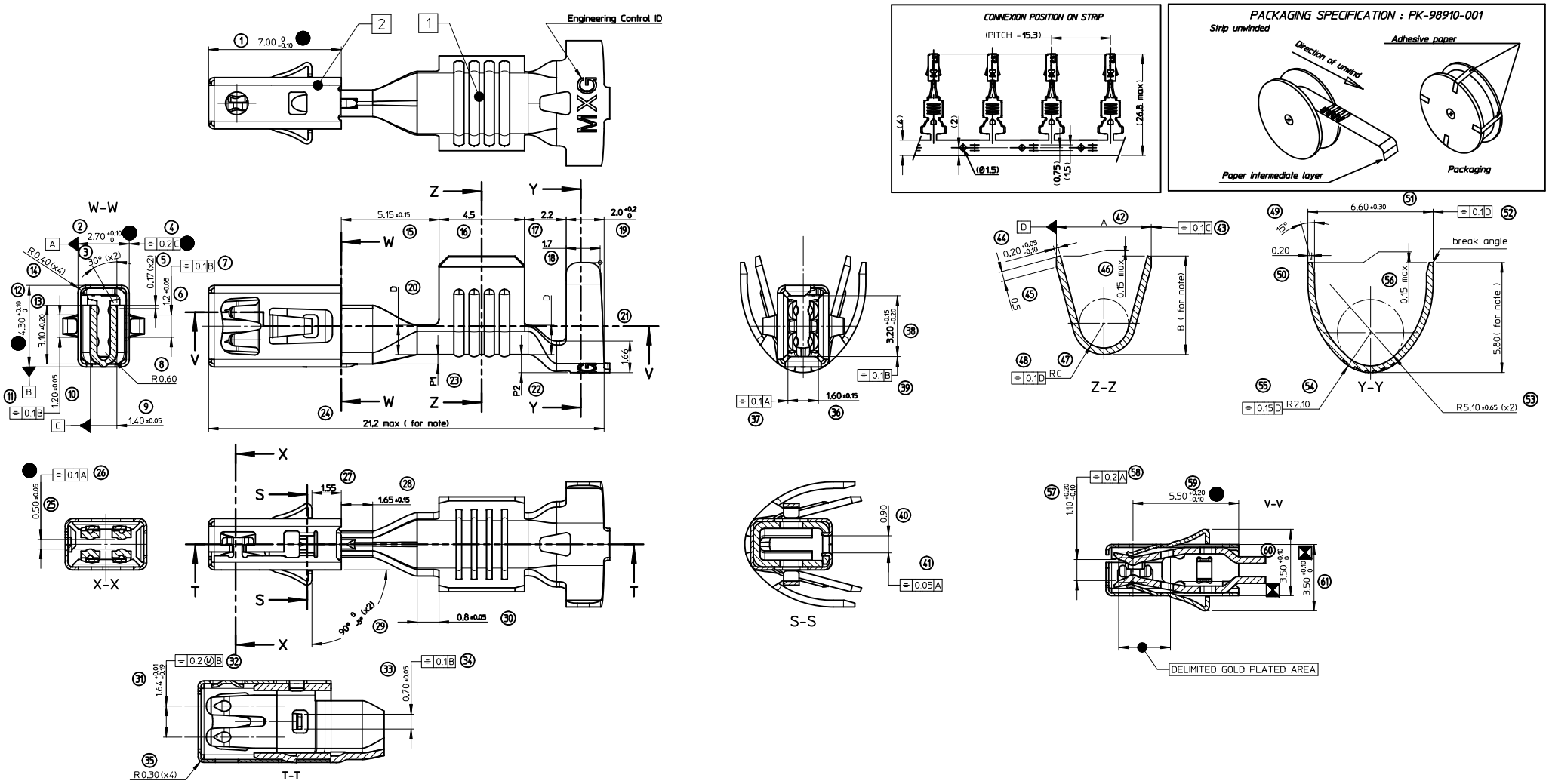


NOTE:
- CRIMPING SPECIFICATION ACCORDING TO AS-64324-001

| MARK | DESIGNATION | MATERIAL |
|---|---|---|
| 2 | BOX TERMINAL | STAINLESS STEEL thickness : 0.15 mm |
| 1 | BODY TERMINAL | HIGH CONDUCTIVITY COPPER ALLOY thickness : 0.35 mm |

| MATERIAL NUMBER | PLATING: CONTACT AREA | PLATING: CRIMPING AREA | PLATING: UNDERLAYER | CRIMPING RANGE (mm2) | A ±0.2 | B | rC ±0.1 | D ±0.1 | P1 ±0.1 | P2 ±0.1 | WEIGHT (g) | Identifcation |
|---|---|---|---|---|---|---|---|---|---|---|---|---|
| 0643241119 | Au 1.27µ MINI | Sn | Ni | >3 TO 5 | 5.0 | 5.2 | 1.3 | 1.55 | 0.5 | 0.95 | 0.4902 | D |
| 0643241019 | Sn | Sn | | | | | | | | | 0.4795 | |
| 0643241129 | Au 1.27µ MINI | Sn | Ni | >2 TO 3 | 4.1 | 4.4 | 1.0 | 1.45 | 0.5 | 0.95 | 0.4604 | C |
| 0643241029 | Sn | Sn | | | | | | | | | 0.4470 | |
| 0643241139 | Au 1.27µ MINI | Sn | Ni | >1 TO 2 | 4.1 | 3.5 | 0.9 | 1.3 | 0.6 | 1.3 +0.1 -0.2 | 0.4274 | B |
| 0643241039 | Sn | Sn | | | | | | | | | 0.4191 | |
| 0643241149 | Au 1.27µ MINI | Sn | Ni | 0.50 TO 1 | 2.8 | 2.6 | 0.7 | 1.1 | 0.6 | 1.3 | 0.3916 | A |
| 0643241049 | Sn | Sn | | | | | | | | | 0.3815 | |

crimp range identification

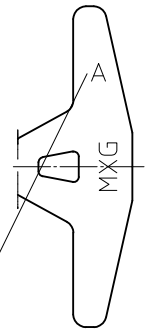


(SKC) COTES CARACTERISTIQUES SPECIALES
SPECIAL KEY CHARACTERISTICS
INDICATION DIMENSIONS S.P.C
DENOTES S.P.C DIMENSIONS
INDICATION DIMENSIONS CRITIQUES
DENOTES CRITICAL DIMENSIONS
INDICATION DIMENSIONS FONCTIONNELLES
DENOTES FUNCTIONAL DIMENSIONS

QUANTITE PAR FEUILLE INDIVIDUELLE
QUANTITY PER INDIVIDUAL SHEET
2 0 6 (SKC) 0

REVISED
EC NO: G2012-0072
DRWN:PBOSQUAIN 2011/11/23
CHKD:PLESSIS 2011/11/23
APPR:CBOUCHAN 2012/01/04
REV D
DESCRIPTION

GENERAL TOLERANCES (UNLESS SPECIFIED)

| | mm | INCH |
|---|---|---|
| 4 PLACES | ± --- | ± --- |
| 3 PLACES | ± --- | ± --- |
| 2 PLACES | ± 0.10 | ± --- |
| 1 PLACE | ± 0.1 | ± --- |
| ANGULAR | ± 2 ° | |

DRAFT WHERE APPLICABLE MUST REMAIN WITHIN DIMENSIONS

| | | | |
|---|---|---|---|
| DIMENSION STYLE: MM ONLY | SCALE: 10:1 | DESIGN UNITS: METRIC | FIRST ANGLE PROJECTION |
| DRAWN BY: VGUERIN | DATE: 2007/11/07 | TITLE: CP RCPT TRM 2.8 | |
| CHECKED BY: FPAROLARI | DATE: 2007/11/07 | | |
| APPROVED BY: LSTICKEIR | DATE: 2007/11/07 | MOLEX INCORPORATED | |
| MATERIAL NO.: SEE CHART | | DOCUMENT NO.: SD-64324-001 | SHEET NO.: 1 OF 1 |
| SIZE: A1 | THIS DRAWING CONTAINS INFORMATION THAT IS PROPRIETARY TO MOLEX INCORPORATED AND SHOULD NOT BE USED WITHOUT WRITTEN PERMISSION | | |

b_frame_A1_P_AM_F
Rev. E 2006/04/15