UNIT: mm

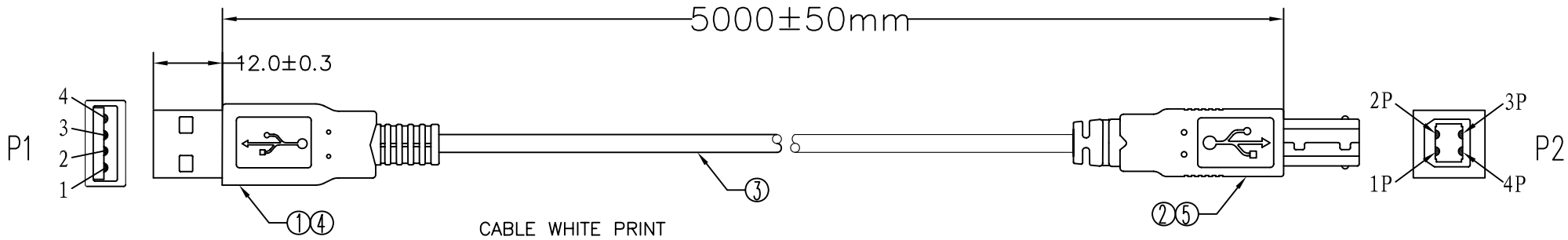

CABLE WHITE PRINT
USB CABLE E189529 AWM 2725 28AWG/1PR AND 24AWG/2C 80°C 30V VW-1

PIN ASSIGNMENT:

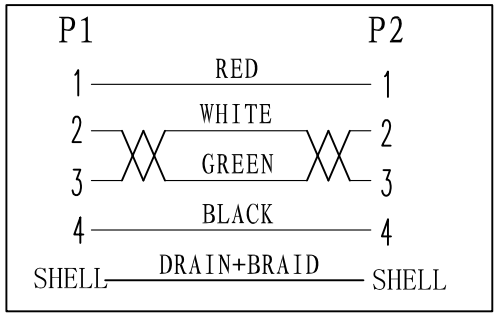

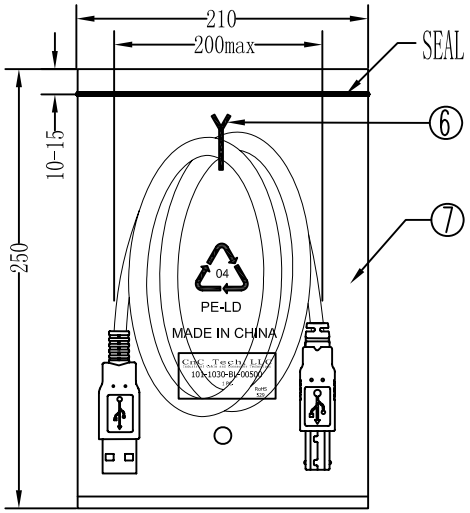

1PC/PE BAG

Electrical test:
1.100% short,open,miswire test
2.Conduct resistance:5 Ohm(max)
3.Insulation resistance:5Mohm(min)
4.dielectric test:DC 300V

NO.	NAME	Q'TY	SPECIFICATION
⑧	PE BAG	1/5	CLEAR SIZE:330*380*0.05mm PRINT BLACK"MADE IN CHINA"+"5PCS".
⑦	PE BAG	1	CLEAR SIZE:210*250*0.05mm PRINT BLACK"MADE IN CHINA"+"1PC".
⑥	TIE	1	BLACK L=150mm
⑤	OUT JACKET	6g	BLACK PVC-40P (MOULD NO:WM-65)
④	OUT JACKET	6g	BLACK PVC-40P (MOULD NO:WM-40)
③	CABLE	1	BLACK USB1.1 UL2725 28#/1P+24#/2C+AEB OD:4.7mm L=5000±20mm
②	CONN	1set	USB B MALE SHELL:NICKEL PIN G/F 3PCS TYPE INSULATOR COLOR:WHITE
①	CONN	1set	USB A MALE SHELL:NICKEL PIN G/F 3PCS TYPE INSULATOR COLOR:WHITE

CnC Tech, LLC
Industrial Cable and Connector Technology

DRAWED	ZHONGHS	DRAWING NO	
CHECKED		CUSTOMER	
APPROVAL		ITEM NO.	101-1030-BL-00500
DECIDED		DATE	2011-10-25
VERSIONS/EDITEON	A/0	PROJECTION	