REVISIONS				
REV.	ECO NO.	DESCRIPTION	DATE	BY
B	1845	UPDATE TOLERANCE BLOCK, ADD NOTE 11	11/6/2008	JH
C	1909	ADD 'V' PLATING, UPDATE NOTES	2/4/2009	JH
D	2149	REMOVE "E" PLATING, UPDATE NOTES 10, AVAILABLE POSITION NUMBERS	06/15/2010	LH
E	2835	UPDATE NOTE 4 (WAS OPERATING TEMP, -45˚C TO +85˚C)	4/21/2014	JHSU

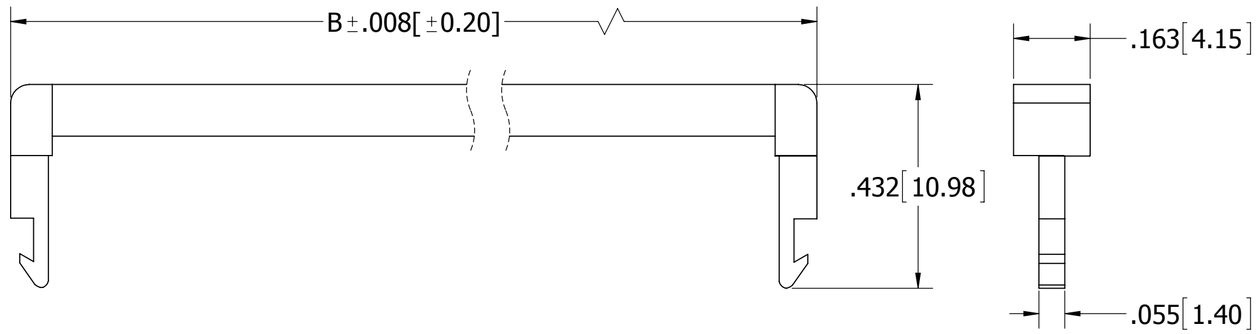

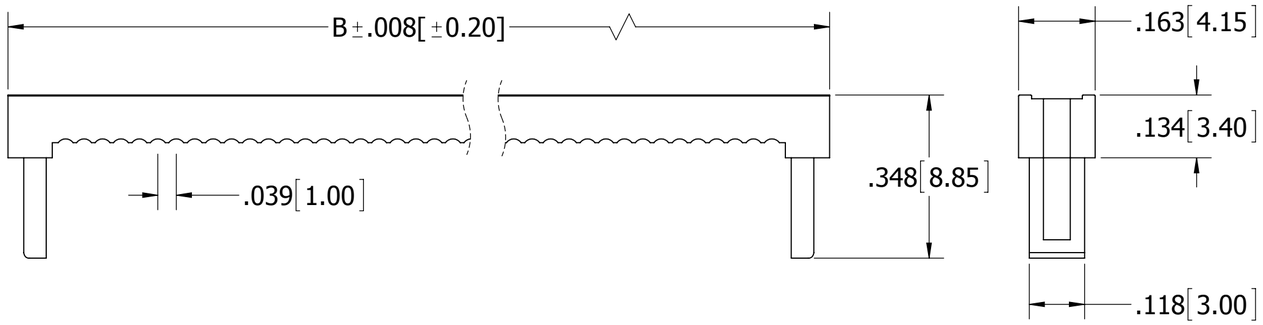

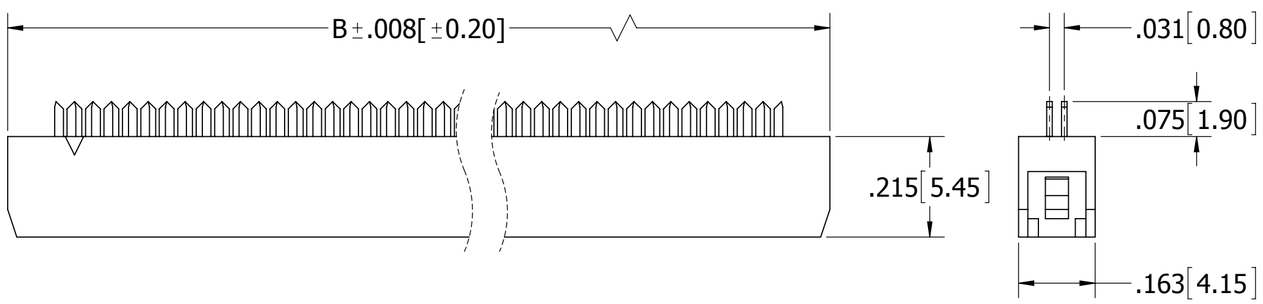

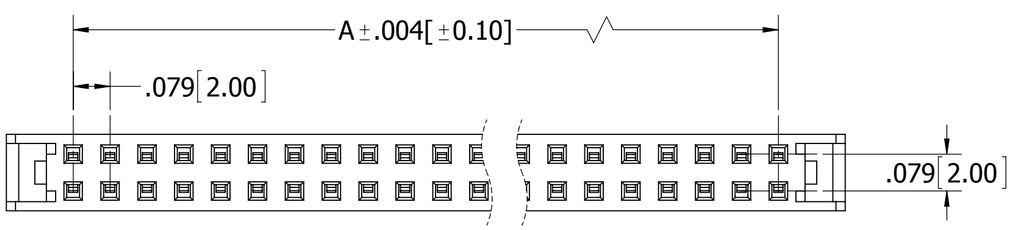

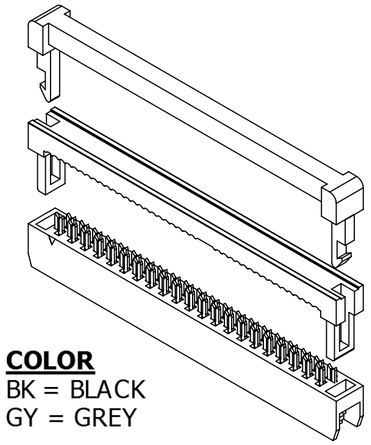

PART NUMBER CODING

SFH213-PP_N-D_ _-ID-_ _-M181

COLOR
BK = BLACK
GY = GREY

NUMBER OF POSITIONS
(CONTACTS PER ROW)

PLATING
P = GOLD FLASH OVERALL
V = GOLD FLASH ON CONTACT SURFACE, NICKEL ON TERMINATION

PART NUMBER	POSITIONS/ CONTACTS	A		B	
		IN	MM	IN	MM
SFH213-PP_N-D05-ID-_ _-M181	05/10	.315	8.00	.600	15.25
SFH213-PP_N-D06-ID-_ _-M181	06/12	.394	10.00	.679	17.25
SFH213-PP_N-D07-ID-_ _-M181	07/14	.472	12.00	.758	19.25
SFH213-PP_N-D08-ID-_ _-M181	08/16	.551	14.00	.837	21.25
SFH213-PP_N-D10-ID-_ _-M181	10/20	.709	18.00	.994	25.25
SFH213-PP_N-D11-ID-_ _-M181	11/22	.787	20.00	1.073	27.25
SFH213-PP_N-D12-ID-_ _-M181	12/24	.866	22.00	1.152	29.25
SFH213-PP_N-D13-ID-_ _-M181	13/26	.945	24.00	1.230	31.25
SFH213-PP_N-D15-ID-_ _-M181	15/30	1.102	28.00	1.388	35.25
SFH213-PP_N-D17-ID-_ _-M181	17/34	1.260	32.00	1.545	39.25
SFH213-PP_N-D20-ID-_ _-M181	20/40	1.496	38.00	1.781	45.25
SFH213-PP_N-D22-ID-_ _-M181	22/44	1.654	42.00	1.939	49.25
SFH213-PP_N-D25-ID-_ _-M181	25/50	1.890	48.00	2.175	55.25

NOTES:
1. INSULATOR MATERIAL: PBT 30% GLASS FIBER
2. CONTACT MATERIAL: PHOSPHOR BRONZE
3. PLATING: SEE PART NUMBER CODING
4. OPERATING TEMPERATURE: -45˚C TO +105˚C
5. UL FLAMMABILITY RATING: 94V-0
6. CURRENT RATING: 1 AMP PER CONTACT
7. INSULATION RESISTANCE: 1,000M OHMS MIN.
8. DIELECTRIC WITHSTANDING: 500 VAC
9. MATES WITH SBH21 SERIES
10. FOR .039"[1.00mm] PITCH FLAT CABLE, 26 - 28 AWG WIRE RANGE
11. M181 DENOTES PART W/O POLARIZING KEY

RoHS COMPLIANT

UNLESS OTHERWISE SPECIFIED:
DIMENSIONS ARE IN INCHES [MM]

TOLERANCES:

ANGULAR: ± 1°

DECIMALS
.XX = ± .012 [.3]
.XXX = ± .008 [.20]
.XXXX = ± .0040 [.100]

DRAWN	DATE	NAME
	10/28/08	JH

THE INFORMATION HEREIN CONTAINS PROPIETARY INFORMATION OF SULLINS ELECTRONICS AND IS NOT TO BE REPRODUCED, USED OR DISCLOSED TO OTHERS FOR ANY PURPOSE EXCEPT AS SPECIFICALLY AUTHORIZED IN WRITING BY AN OFFICER OF SULLINS ELECTRONICS.

SULLINS CONNECTOR SOLUTIONS

TITLE
HEADER FEMALE,.079[2.00] CC,SR w/o POLARIZING KEY

PART NUMBER
SFH213-PP_N-D_ _-ID-_ _-M181

SIZE	CAGE CODE	DWG. NO.	REV
C	54453	11157	E

SCALE: 4:1 | SHEET 1 OF 1

FILE NAME: 11157, SFH213-PP_N-D_ _-ID-_ _-M181