MICRO SWITCH
a Honeywell Division
FED. MFG. CODE 91929

SWITCH – TOGGLE (MAGNETIC HOLD–IN)

CATALOG LISTING
27ET70–T
FSCM NO. 76301
ST5M 1261–002

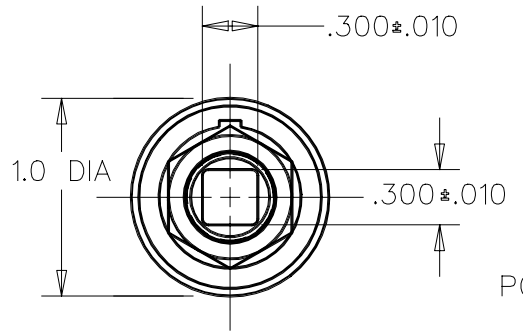

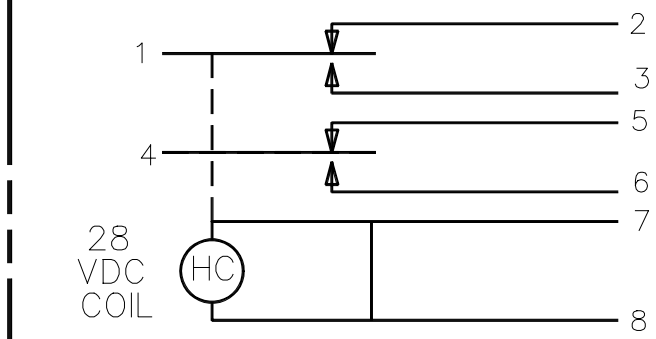

CIRCUIT DIAGRAM
(MECHANICALLY MAINTAINED
POSITION B)

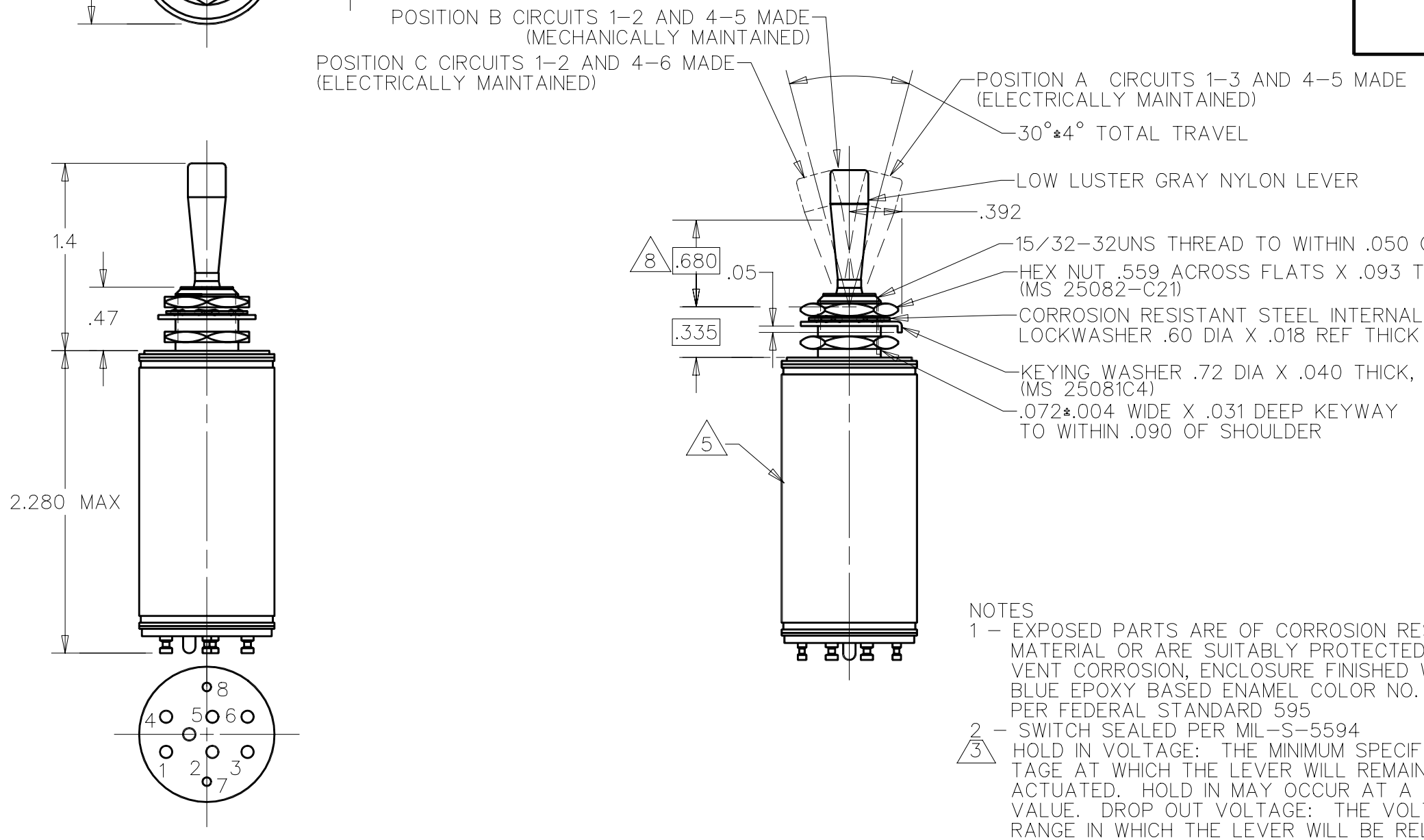

NOTES
1 – EXPOSED PARTS ARE OF CORROSION RESISTANT MATERIAL OR ARE SUITABLY PROTECTED TO PREVENT CORROSION, ENCLOSURE FINISHED WITH BLUE EPOXY BASED ENAMEL COLOR NO. 25184 PER FEDERAL STANDARD 595
2 – SWITCH SEALED PER MIL–S–5594
3 HOLD IN VOLTAGE: THE MINIMUM SPECIFIED VOLTAGE AT WHICH THE LEVER WILL REMAIN ACTUATED. HOLD IN MAY OCCUR AT A LOWER VALUE. DROP OUT VOLTAGE: THE VOLTAGE RANGE IN WHICH THE LEVER WILL BE RELEASED
4 – CIRCUITS CAN BE TRANSFERRED MANUALLY. ENERGIZING THE COIL WILL NOT CAUSE TRANSFER OF CIRCUITS
5 CIRCUIT IDENTIFICATION IS SHOWN ON SWITCH
6 WEIGHT OF SWITCH ONLY IS 4.0 OZ MAX
7 HARDWARE MAY BE FURNISHED UNASSEMBLED PER MIL–S–5594
8 FORCE TO BE APPLIED AT THIS POINT IN A DIRECTION PERPENDICULAR TO THE LEVER LONGITUDINAL AXIS
9 – ALL EDGES AND CORNERS OF BAT HANDLE TO HAVE .030 R

THIS DRAWING COVERS A PROPRIETARY ITEM AND IS THE PROPERTY OF MICRO SWITCH. A DIVISION OF HONEYWELL. THIS DRAWING IS NOT TO BE COPIED OR USED WITHOUT THE APPROVAL OF MICRO SWITCH

THIRD ANGLE PROJECTION
SCALE
DO NOT SCALE PRINT

UNLESS OTHERWISE SPECIFIED TOLERANCES ARE

ONE PLACE	(.0)	±.030
TWO PLACE	(.00)	±.015
THREE PLACE	(.000)	±.005
ANGLES		±

WEIGHT 6

CHARACTERISTICS 3

SOLENOID RATING AT 20° C

STEAD STATE LIMITS	20–29 VDC
HOLD IN	15 VDC
DROP OUT	1.5–15 VDC
COIL RESISTANCE	220 OHM MIN
OPERATING FORCE 8	7 LBS MAX 1.25 LB MIN
OVERRIDE FORCE AT 29 VDC 8	10 LBS MAX 2.5 LB MIN

ELECTRICAL DATA

CONTACT ARRANGEMENT
S P D T (2)

VOLTAGE	RATINGS IN AMPHERES							
	SEA LEVEL				65,000 FT			
	INRUSH	RES	IND	MOTOR	INRUSH	RES	IND	MOTOR
28 VOLTS DC		7	2			5	1.5	

ANSI Y14.5M–1982 APPLIES

CATALOG LISTING 27ET70–T
PAGE 1 OF 1
ISSUE 12
REPLACES
RELEASE NO. PR–5421

REVISIONS		
A	C061410	K A G 6 MAY 87
B	CO–75787–C	T S M 26 MAY 94
C	C081287	J A K 30 JUN 95

DRAWN	K A G	6MAY87
CHECK	MAM	21 JUL 87
CHECK	DDM/CAD	