THIS DRAWING IS UNPUBLISHED. RELEASED FOR PUBLICATION 20
© COPYRIGHT 20 BY - ALL RIGHTS RESERVED.

REVISIONS

P	LTR	DESCRIPTION	DATE	DWN	APVD
	A	INITIAL RELEASE	19DEC2016	N.P	X.X

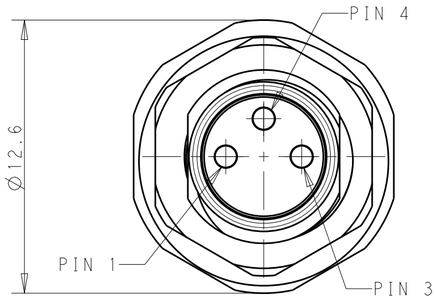

VIEW A
3POS.

VIEW A

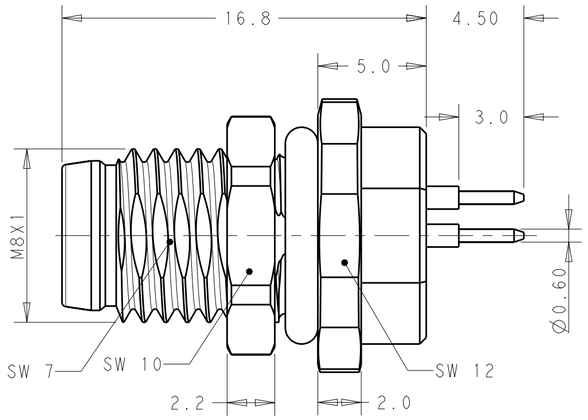

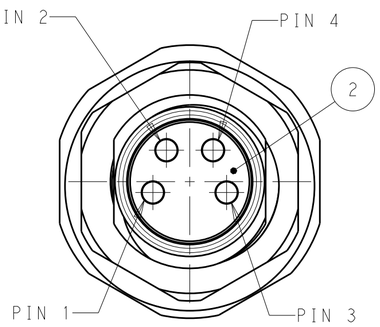

VIEW A
4POS.

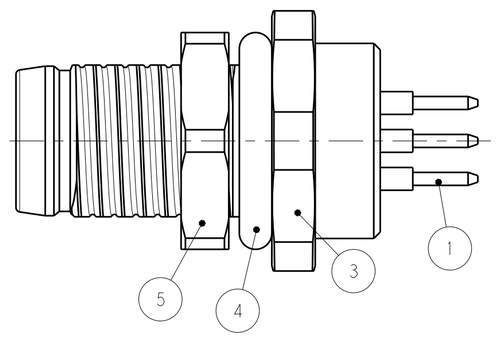

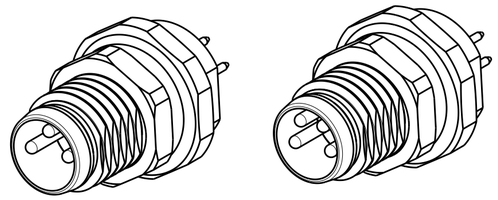

NOTES:

1. TECHNICAL DATA: SEE TABLE 1
2. PIN ASSIGNMENT SEE VIEW A.
3. ALL PRODUCT MUST COMPLIANCE WITH ROHS AND REACH.

注意事项

1. 技术参数：见表1
2. 端子分布见视图A；
3. 产品必须符合ROHS与REACH.

TABLE 1

TECHNICAL DATA	T4040014031-000	T4040014041-000
RATED IMPULSE VOLTAGE	1500V	800V
RATED VOLTAGE	60V	30V
RATED CURRENT	3A	
OVERVOLTAGE CATEGORY	II	
MATERIAL GROUP	II	
DEGREE OF PROTECTION	IP67	
TEMPERATURE	-40°C~85°C	

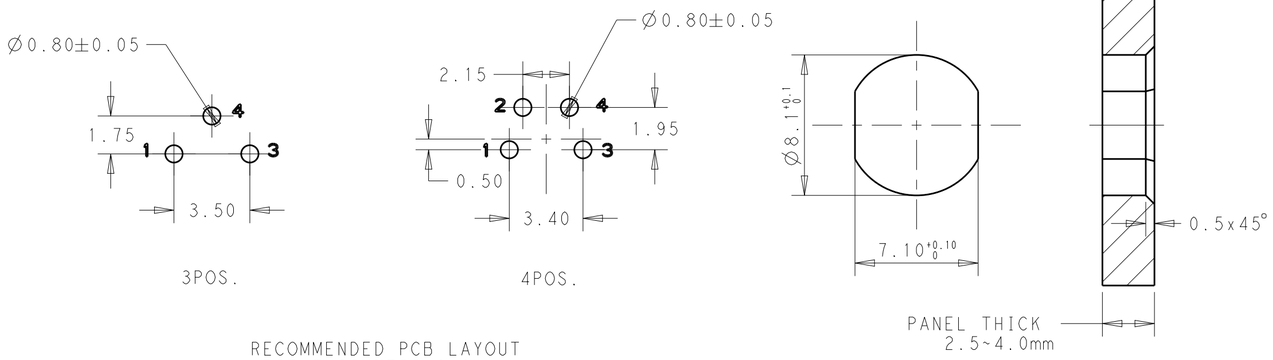

3POS.

4POS.

RECOMMENDED PCB LAYOUT
PCB THICKNESS:1.6mm

RECOMMENDED PANEL THICK

MATERIAL	DESCRIPITON	ITEM
COPPER ALLOY	NUT	5
RUBBER	O-RING	4
COPPER ALLOY	BODY NUT	3
PA66 UL94-V0	HOUSING	2
GOLD PLATED	CONTACT	1

TYPE	POS.	PART NUMBER
RPC-M8-MF-4CON-M10-LBU	4	T4040014041-000
RPC-M8-MF-3CON-M10-LBU	3	T4040014031-000

THIS DRAWING IS A CONTROLLED DOCUMENT.

DIMENSIONS: mm

TOLERANCES UNLESS OTHERWISE SPECIFIED:
0 PLC ±-
1 PLC ±0.25
2 PLC ±0.15
3 PLC ±
4 PLC ±
ANGLES ±-

MATERIAL: TBD material_2
FINISH: - finish_spec_2

DWN 30NOV2016 Nick Pan
CHK 30NOV2016 Kobby Zhao
APVD 30NOV2016 Xiang Xu
PRODUCT SPEC 108-106140
APPLICATION SPEC 114-137144-1
WEIGHT -

TE Connectivity

NAME
M8 PANEL PCB CONNECTOR MALE SIDE REAR MOUNTING
-

SIZE	CAGE CODE	DRAWING NO	RESTRICTED TO
A2	-	C-T40400140X1000	-

CUSTOMER DRAWING | SCALE 3:1 | SHEET 1 OF 1 | REV A

1471-9 (3/13)