THIS DRAWING IS UNPUBLISHED. RELEASED FOR PUBLICATION 2018
© COPYRIGHT 2018 BY -TE CONNECTIVITY ALL RIGHTS RESERVED.

REVISIONS

P	LTR	DESCRIPTION	DATE	DWN	APVD
	A	REVISED PER PCN E-18-000064	02JAN2018	SS	DM

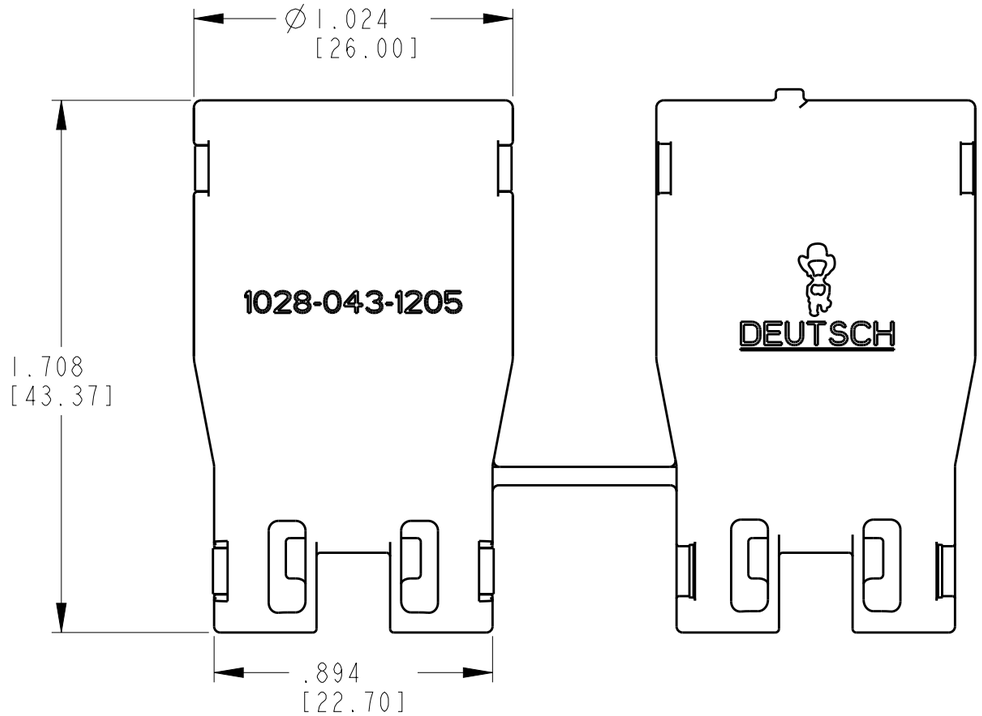

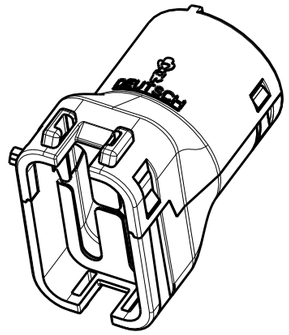

3-D VIEW
CLOSED

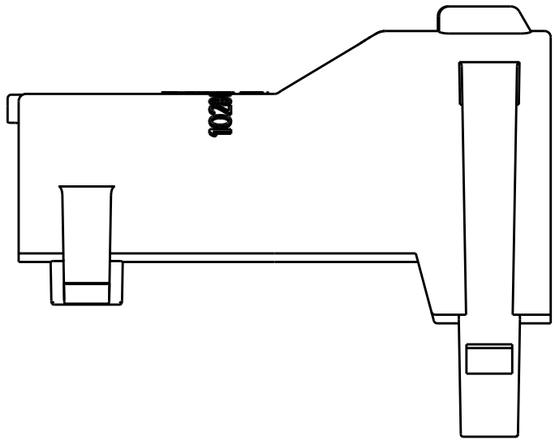

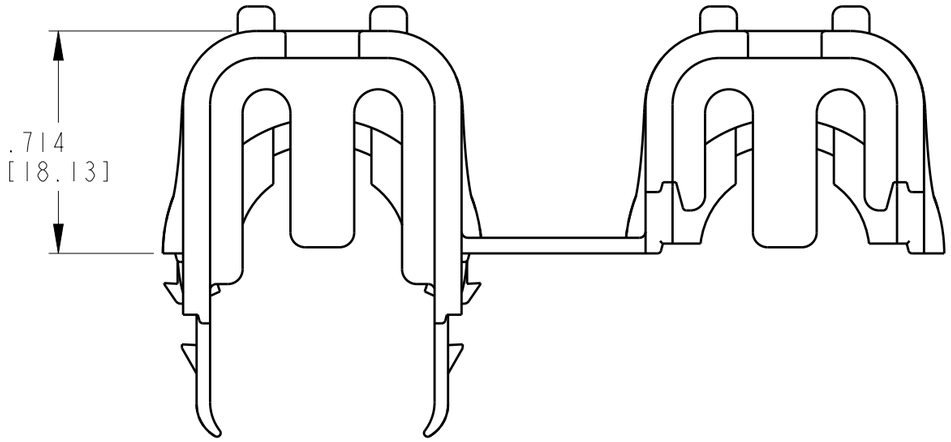

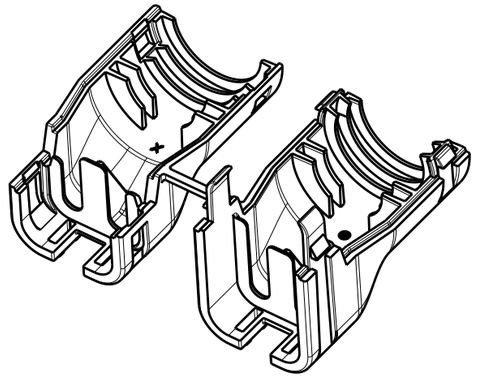

3-D VIEW
OPEN

TE INTERNAL PN	DEUTSCH PN
1028-043-1205	1028-043-1205

2. THIS PART ACCOMMODATES CORRUGATED TUBING SIZES NW 13 & 17.

1. THIS PART MATES WITH DT06-12SX-XXXX PLUG
WITH ANY MODIFICATION THAT DOES NOT INCLUDE AN END CAP.
(X = KEY ARR. A,B,C,D; XXXX = MODIFICATION)

NOTES:

THIS DRAWING IS A CONTROLLED DOCUMENT.

DIMENSIONS: INCHES[mm]

TOLERANCES UNLESS OTHERWISE SPECIFIED:
0 PLC ±
1 PLC ±
2 PLC ±
3 PLC ±.025[0.64]
4 PLC ±
ANGLES ±0°30'0"

MATERIAL: PA66(BLACK)
FINISH:

DWN R.MESSENGER 17FEB2009
CHK B.BYFORD 23FEB2010
APVD S.BEARD 19FEB2010
PRODUCT SPEC -
APPLICATION SPEC -
WEIGHT 9.3 g
CUSTOMER DRAWING

TE Connectivity

NAME: BACK SHELL
12 PIN PLUG DT SERIES
-

SIZE	CAGE CODE	DRAWING NO	RESTRICTED TO
A3	4AFU8	C-1028-043-1205	-

SCALE 1:1 SHEET 1 OF 1 REV A

1470-19 (3/13)