THIS DRAWING IS UNPUBLISHED. RELEASED FOR PUBLICATION -,- .
© COPYRIGHT - TE Connectivity ALL RIGHTS RESERVED.

REVISIONS

P	LTR	DESCRIPTION	DATE	DWN	APVD
	D	ECR-16-013251	12JUL2017	FL	SY

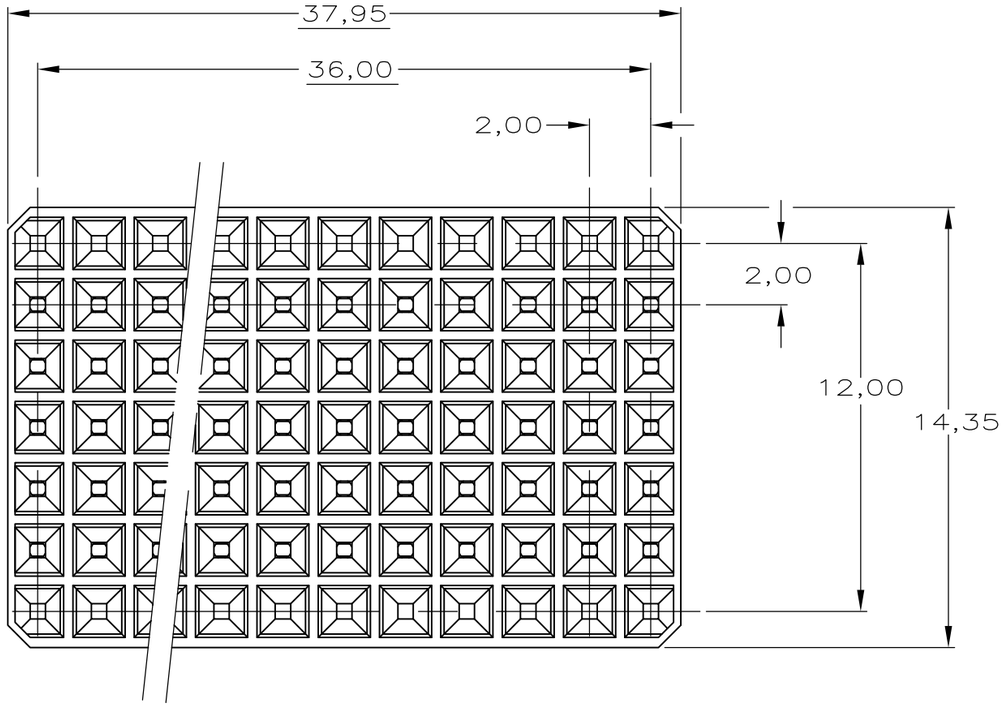

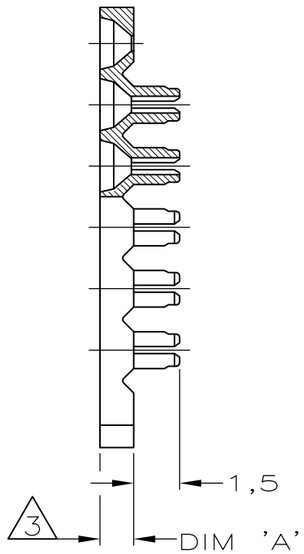

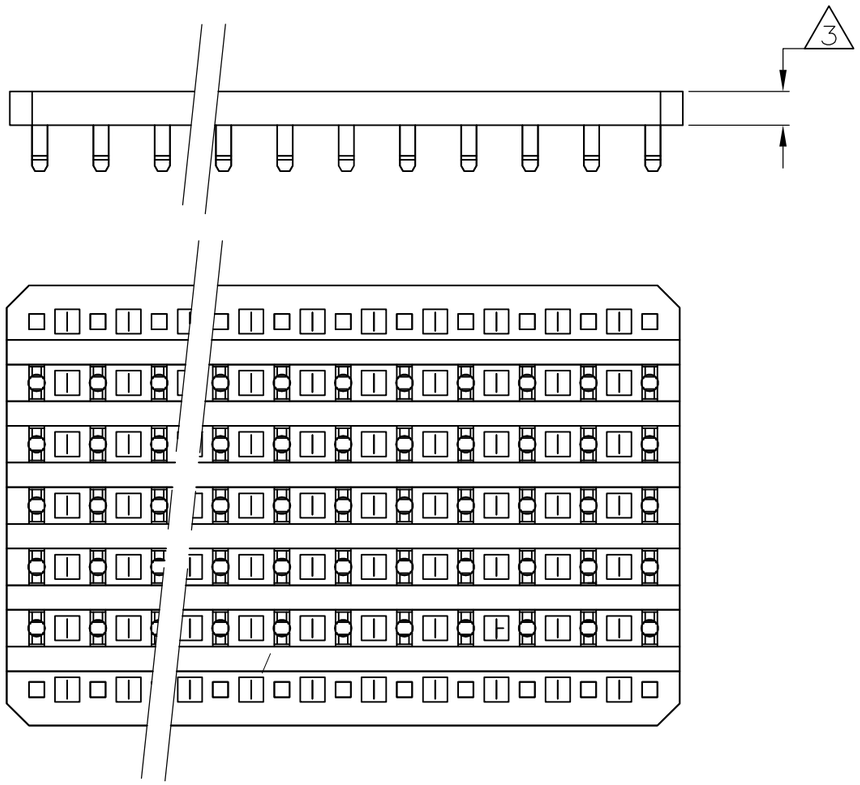

NOTES:

1. MATERIAL: UNFILLED POLYESTER.(GREY)
2. 0-352012-3 AS SHOWN.
3. VARIABLE HEIGHT.
4. TO DETERMINE THE RECOMMENDED SPACER-THICKNESS FOR A GIVEN PCB THICKNESS: SEE APPLICATION SPECIFICATION 114-19031.
5. OBSOLETE PARTS: OBSOLETE CIS STREAMLINING PER D.RENAUD/D.SINISI

	PARTNUMBER	4 DIM "A"
OBSOLETE	~~0-352012-1~~	0,7
OBSOLETE	~~0-352012-2~~	0,9
5 OBSOLETE	~~0-352012-3~~	1,1
	~~0-352012-4~~	1,3
	0-352012-5	1,5
OBSOLETE	~~0-352012-6~~	1,7
5 OBSOLETE	~~0-352012-7~~	1,9

THIS DRAWING IS A CONTROLLED DOCUMENT.

DIMENSIONS: mm

TOLERANCES UNLESS OTHERWISE SPECIFIED:
0 PLC ± -
1 PLC ± -
2 PLC ± - ±0.2
3 PLC ± -
4 PLC ± -
ANGLES ± -

MATERIAL -

FINISH -

DWN D. TRUREN 16-AUG-96
CHK FvKONINGSBRUGGE 24 JUN 1997
APVD FvKONINGSBRUGGE 24 JUN 1997
PRODUCT SPEC 108-19082
APPLICATION SPEC 114-19029
WEIGHT 0.000000

TE Connectivity

NAME Z-PACK 2mm HM SPACER, TYPE B
19 COLUMNS
-

SIZE	CAGE CODE	DRAWING NO	RESTRICTED TO
A3	00779	C-352012	-

CUSTOMER DRAWING

SCALE	SHEET	REV
-	1 OF 1	D