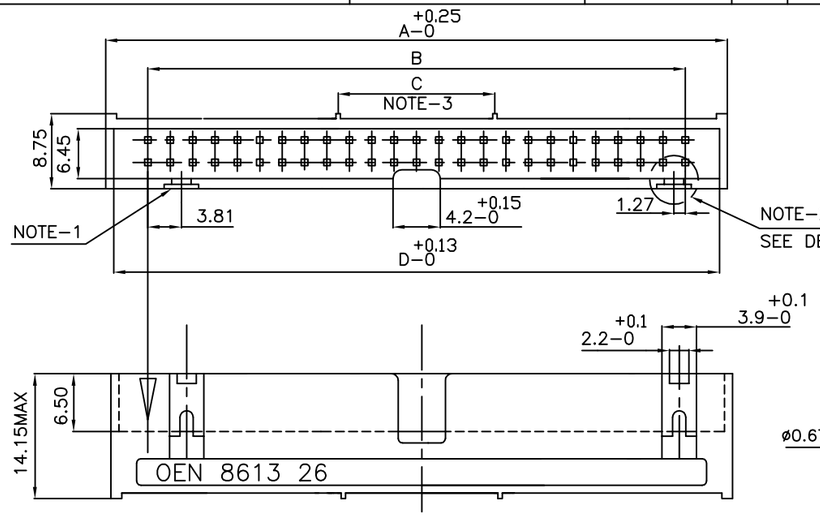

DETAIL-A

DIMENSIONS												
D	17.91	22.99	25.53	30.61	38.23	43.31	48.39	56.01	68.71	81.41	86.49
C	–	–	–	–	17.78	17.78	17.78	25.4	17.78	25.4	25.4
B	10.16	15.24	17.78	22.86	30.48	35.56	40.64	48.26	60.96	73.66	78.74
A-0 +0.25	19.71	24.79	27.33	32.41	40.03	45.11	50.19	57.81	70.51	83.21	88.29
NO.OF POSITIONS	10	14	16	20	26	30	34	40	50	60	64

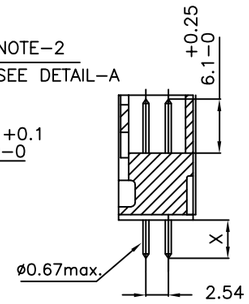

14:X=4.35±0.35
24:X=2.90±0.2
STRAIGHT SPILL[14&24]

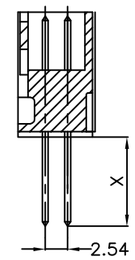

15:X=15.5±0.35
WIRE WRAP[15]

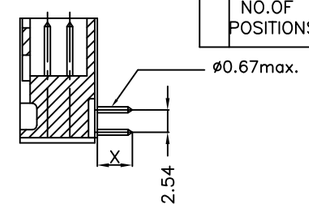

13:X=4.20±0.35
23:X=2.80±0.2
ANGLED SPILL[13&23]

ORDERING INFORMATION

8613 0 ☐ ☐ 1 0 ☐ ☐ ☐ ☐ ☐ ☐

SERIES

NO.OF CONTACTS :-
10,14,16,20,26,30,34
40,50,60,64

BOX HEADER WTHOUT LEVER

TYPE OF TERMINATION
13 – LONG ANGLED SPILL
14 – LONG STRAIGHT SPILL
23 – SHORT ANGLED SPILL
24 – SHORT STRAIGHT SPILL
15 – WIRE WRAP

000E1– TIN LEAD VERSION
E1LF–LEADFREE VERSION

LONGITUDINAL PITCH
5 – 2.54 mm

PERFORMANCE CLASS
4 – DIN 41651 CLASS 3
5 – DIN 41651 CLASS 2
6 – DIN 41651 CLASS 1
8 – AS PER JSS 50810

INSULATOR MATERIAL
3 – PBT GREY

TECHNICAL SPECIFICATION

INSULATOR MATERIAL — THERMOPLASTIC POLYESTER UL 94V0; GREY
HOUSING CAN WITHSTAND EXPOSURE TO LEADFREE WAVE SOLDERING TEMPERATURE OF 260-265°C FOR STRAIGHT CONNECTORS AS IT IS USED IN CLASSICAL LEAD WAVE SOLDERING AT 235-250° C. FOR ANGLE CONNECTORS PROTECTIVE ADHESIVE OR METALLIC DEVICE TO BE USED AS IN CLASSICAL LEAD WAVE SOLDERING AT 235-250°C.

CONTACT MATERIAL — COPPER ALLOY
PLATING — ACTIVE ZONE – GOLD OVER NICKEL
— TERMINATION ZONE – SnPb OVER Ni FOR LEADED VERSION.
– Sn (MATTE TIN) OVER Ni FOR LEAD FREE VERSION.

CURRENT RATING — 1.5A AT 20°C
INSULATION RESISTANCE — ⩾5000MΩ AT 100V
CONTACT RESISITANCE — ⩽20mΩ
DIELECTRIC WITHSTANDING VOLTAGE — 1000 Vrms
OPERATING TEMPERATURE — –55°C TO +125°C
REFERENCE SPECIFICATION — IEC 603–13 / DIN 41651

NOTES:

1. LEFT POLARISATION IS NOT PROVIDED FOR 10 & 14 POSITIONS.
2. RIGHT POLARISATION IS NOT PROVIDED FOR 10 POSITION.
   FOR 10 POSITION, INSTEAD OF RIGHT POLARISATION, PROJECTION AS GIVEN IN DETAIL–A WILL BE PROVIDED.
3. INTERMEDIATE LEGS ARE PRESENT ONLY ABOVE 20 POSITION.

PCB DRILLING DETAILS

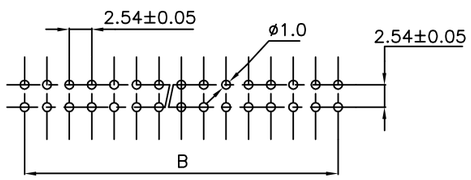

STRAIGHT SPILL TERMINATION

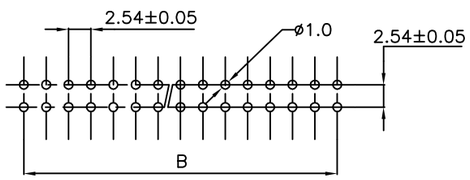

ANGLED SPILL TERMINATION

NOTES:-
1. THE "LF " PRODUCTS MEET EUROPEAN UNION DIRECTIVES AND OTHER COUNTRY REGULATIONS AS DESCRIBED IN GS-22-008
2. THE HOUSING WILL WITHSTAND EXPOSURE TO 260°C PEAK TEMPERATURE FOR 3.5 SECONDS IN A WAVE SOLDER APPLICATION WITH A 1.6 MM MINIMUM THICK CIRCUIT BOARD
3. LEAD FREE OR RoHS DIRECTIVE LABELING TO BE PROVIDED AS PER GS-14-920 FOR RoHS COMPATIBLE VERSION.

ltr	ecn no	dr	date
A	–	MINI	06/12/1998
B	I06–0066	MINI	01/06/2006

dr	MINI.K.VANDANATH	06/12/1998
engr	RAKHEE GEORGE	06/12/1998
chr	RAKHEE GEORGE	01/06/2006
appd	RAKHEE GEORGE	01/06/2006

mat'l. code –
surface ISO 1302
tolerance ISO 406 ISO 1101
tolerances unless otherwise specified
angles 0°±1°
linear .0±.1
projection
mm
scale –
product family 8613
title 8613 BOX HEADER
dwg no C-8613-0024
sheet 1 of 1
size A3
type Product Customer Drawing
sheet index
revision B
sheet 1

FCIconnect.com
Copyright FCI