THIS DRAWING IS UNPUBLISHED. RELEASED FOR PUBLICATION - ,- .
© COPYRIGHT - By - ALL RIGHTS RESERVED.

LOC	DIST
GP	00

REVISIONS

P	LTR	DESCRIPTION	DATE	DWN	APVD
	H1	REVISED PER ECO-11-005033	23MAR11	RK	HMR

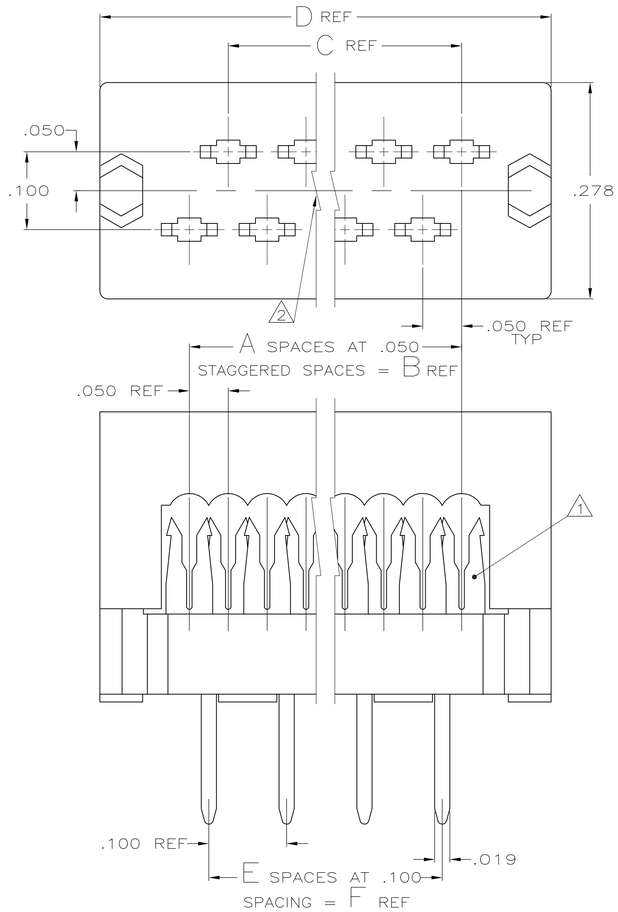

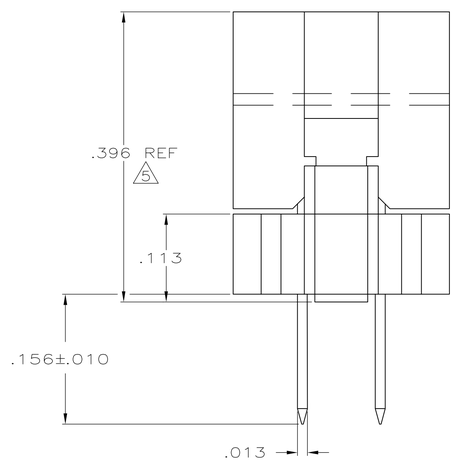

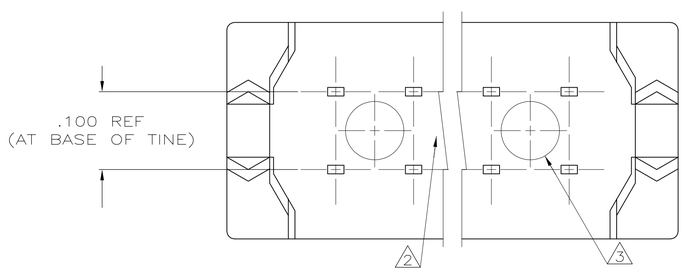

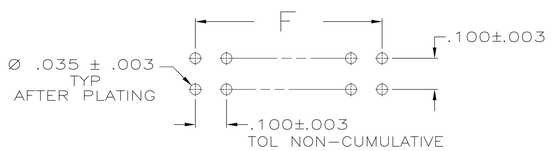

RECOMMENDED HOLE LAYOUT

1. CONTACTS DESIGNED FOR 26 & 28 AWG STRANDED OR 26, 28, & 30 AWG SOLID WIRE.
2. AMP TRADEMARK LOCATED IN APPROX AREA SHOWN.
3. STANDOFFS: POS 10 (2) STANDOFFS AS SHOWN.
   14-16 (3) STANDOFFS, (1) CENTERED BETWEEN (2) SHOWN
   20-26 (4) (2)
   30 (5) (3)
   34 (6) (4)
   40-44 (7) (5)
   50 (8) (6)
   60 (9) (7)
   64 (10) (8)
4. .000100-.000200 BRIGHT TIN LEAD, ALL OVER .000050 NICKEL.
5. HEIGHT AFTER TERMINATION IS .253 REF.
6. .000005 MIN GOLD ON RIBBON CABLE TERMINATION AREA .000100-.000200 MIN MATTE TIN ON SOLDER TAILS, ALL OVER .000050 MIN NICKEL.
7. MOLDED PARTS, 94V-0 RATED THERMOPLASTIC, COLOR: BLACK. CONTACTS: PHOS BRONZE.

	CONTACT FINISH F	E	D	C	B	A	NO OF POSN	PART NO
	6	2.100	21	2.380	2.100	2.150	43	44	2-746610-6
	6	3.100	31	3.380	3.100	3.150	63	64	2- -5
	6	2.900	29	3.180	2.900	2.950	59	60	2- -4
	6	1.100	11	1.380	1.100	1.150	23	24	2- -3
	6	.600	6	.880	.600	.650	13	14	2- -2
	6	.400	4	.680	.400	.450	9	10	2- -1
	6	2.400	24	2.680	2.400	2.450	49	50	2- -0
	6	1.900	19	2.180	1.900	1.950	39	40	1- -9
	6	1.600	16	1.880	1.600	1.650	33	34	1- -8
	6	1.400	14	1.680	1.400	1.450	29	30	1- -7
	6	1.200	12	1.480	1.200	1.250	25	26	1- -6
	6	.900	9	1.180	.900	.950	19	20	1- -5
	6	.700	7	.980	.700	.750	15	16	1- -4
OBSOLETE	4	2.100	21	2.380	2.100	2.150	43	44	1- -3
OBSOLETE	4	3.100	31	3.380	3.100	3.150	63	64	1- -2
OBSOLETE	4	2.900	29	3.180	2.900	2.950	59	60	1- -1
OBSOLETE	4	2.400	24	2.680	2.400	2.450	49	50	1- -0
	4	1.900	19	2.180	1.900	1.950	39	40		-9
	4	1.600	16	1.880	1.600	1.650	33	34		-8
OBSOLETE	4	1.400	14	1.680	1.400	1.450	29	30		-7
	4	1.200	12	1.480	1.200	1.250	25	26		-6
OBSOLETE	4	1.100	11	1.380	1.100	1.150	23	24		-5
	4	.900	9	1.180	.900	.950	19	20		-4
	4	.700	7	.980	.700	.750	15	16		-3
	4	.600	6	.880	.600	.650	13	14		-2
	4	.400	4	.680	.400	.450	9	10	746610 -1

THIS DRAWING IS A CONTROLLED DOCUMENT.

DIMENSIONS: INCHES

TOLERANCES UNLESS OTHERWISE SPECIFIED:
0 PLC ± -
1 PLC ± -
2 PLC ± -
3 PLC ± .005
4 PLC ± -
ANGLES ± -

MATERIAL 7

FINISH CONTACTS: SEE TABLE

DWN L. VARELA - DOCK5 11-29-86
CHK C. ROHDE 11-29-04
APVD M. WALMSLEY 11-29-04

PRODUCT SPEC 108-40013
APPLICATION SPEC 114-40005
WEIGHT -

TE Connectivity

NAME KIT, AMP-LATCH DIP PLUG, PREASSEMBLED, .100 X .100 CENTERS,

SIZE	CAGE CODE	DRAWING NO	RESTRICTED TO
A1	00779	C-746610	-

CUSTOMER DRAWING SCALE NTS SHEET 1 OF 1 REV H1