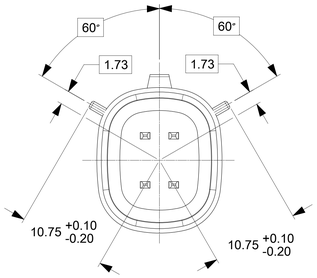

KEYING OPTION A
SCALE 4:1

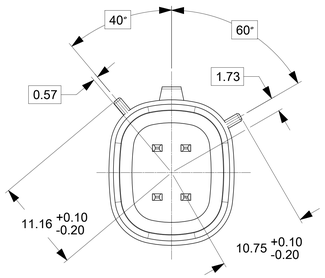

KEYING OPTION B
SCALE 4:1

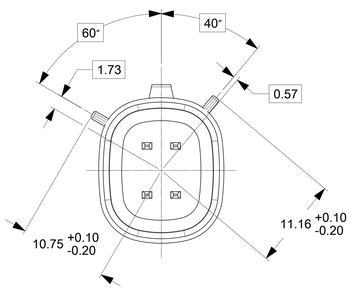

KEYING OPTION C
SCALE 4:1

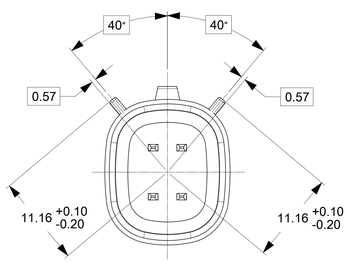

KEYING OPTION D
SCALE 4:1

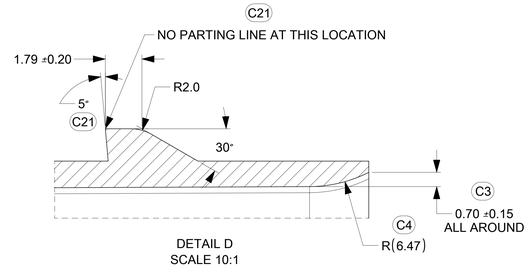

DETAIL D
SCALE 10:1

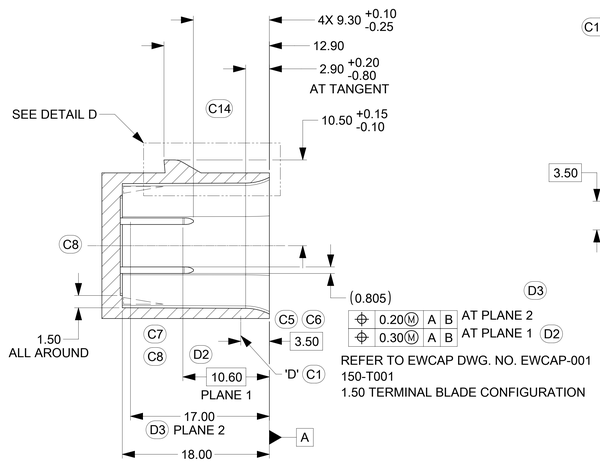

REFER TO EWCAP DWG. NO. EWCAP-001
150-T001
1.50 TERMINAL BLADE CONFIGURATION

SECTION A-A

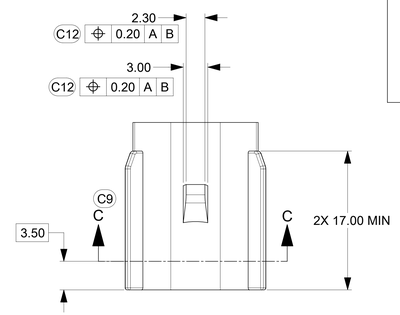

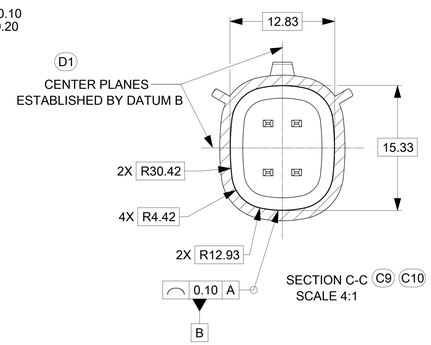

SECTION C-C C9 C10
SCALE 4:1

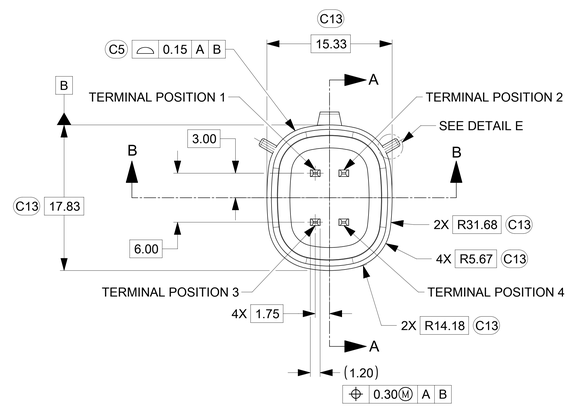

REFER TO EWCAP DWG. NO. EWCAP-001
150-T001
1.50 TERMINAL BLADE CONFIGURATION

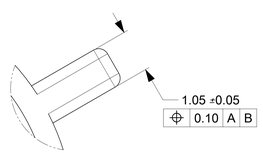

DETAIL E
SCALE 20:1
APPLIES 2X
SEE KEYING OPTION VIEWS
FOR POSITIONS

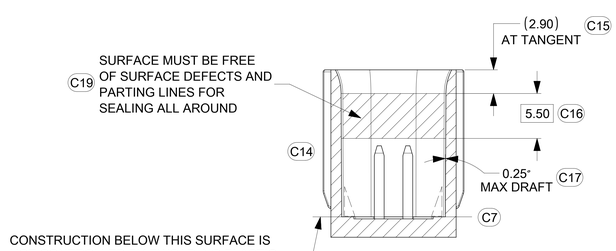

SECTION B-B

IF HEADER IS RECESSED INTO A POCKET. THESE DIMENSIONS REPRESENT
THE MINIMUM CLEARANCE REQUIRED FOR THE MATING CONNECTOR SHROUD.

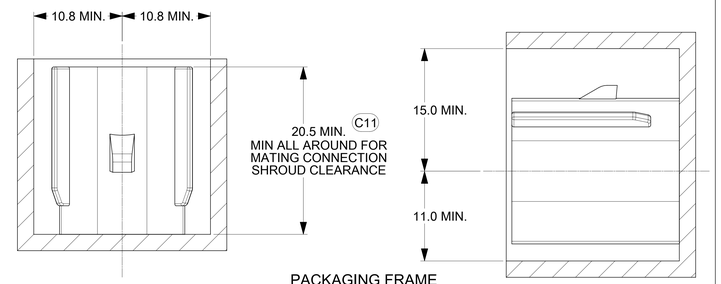

PACKAGING FRAME

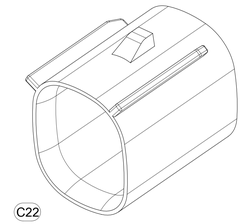

STANDARD NOTICE D4 C20

This drawing, or portions of it are controlled by the Electrical Wiring Components Application Partnership (EWCAP) a subgroup of the United States Council for Automotive Research LLC (USCAR LLC).
USCAR is an LLC consisting of members from FCA US LLC, Ford Motor Company and GM Corporation. Any change to a EWCAP controlled portion of this drawing, including a revision record change must be approved, in writing, by the responsible EWCAP representative from each USCAR member company.
Each EWCAP representative authorized to sign for his or her member company is responsible for obtaining all necessary approvals within that company prior to signing for the approval of the change.
EWCAP expressly prohibits any party from changing either any EWCAP controlled portion of this drawing or any associated tooling before receiving approval, signed by the authorized representatives, of the USCAR member companies. Reference to the signed change notice must be entered in the drawing control column.

NOTES: UNLESS OTHERWISE SPECIFIED C18

1. ALL DIMENSIONS SHOWN IN MILLIMETERS.
2. DIMENSIONING AND TOLERANCING PER ASME Y14.5M-2009 D5
3. 0.25 RADII ON ALL CORNERS SHOWN SHARP.
4. UNSPECIFIED RADII: 0.25 EXCEPT AS NOTED.
5. STANDARD COLORS FOR POLARIZATION (SEE CHART). DEVIATION REQUIRES APPROVAL OF AUTHORIZED PERSON.
6. REFER TO "SAE/USCAR 12 CONNECTOR GUIDELINES" FOR ADDITIONAL REQUIREMENTS.
7. EXCEPT WHERE NOTED, DRAFT ON OUTSIDE SURFACES IS PERMISSIBLE WITHIN TOLERANCE.
8. SYMBOL INDICATES DRAFT DIRECTION.
9. FOR TERMINAL MATERIAL, DIMENSIONAL, AND COATING REQUIREMENTS AND ANY BLADE TERMINAL DESIGN INFORMATION NOT SHOWN ON THIS DRAWING SEE EWCAP DRW. NO. EWCAP-001
10. A FULL SHROUD ON THE MATING CONNECTOR IS REQUIRED TO INSURE THAT THE CONNECTOR-HEADER POLARIZATION FEATURES (OPTIONS A THRU D) WILL FUNCTION. THE FULL SHROUD ALSO PREVENTS SCOOP DAMAGE TO THE HEADER PINS. REFER TO "SAE/USCAR-12 CONNECTOR DESIGN GUIDE LINES" FOR ADDITIONAL INFORMATION.
11. REFER TO USCAR/EWCAP PART LIST AS FOUND ON WEBSITE http://www.uscarteams.org
12. THIS IS A 100% CAD GENERATED PART. THE CAD MATHEMATICAL DATA IS THE MASTER FOR THIS PART. FOR DIMENSIONAL OR ANY INFORMATION NOT SHOWN ON THIS DRAWING, ANALYZE THE CAD MODEL.

132	D5	UPDATED CALL OUT FOR THE REVISION OF GD&T FROM ASME Y14.5-1994 TO Y14.5-2009			
132	D4	UPDATED THE STANDARD NOTICE TO THE LATEST TEMPLATE			
132	D3	ADDED PLANE 2			
132	D2	ADDED PLANE 1			
132	D1	ADDED CALL OUT "CENTER PLANES ESTABLISHED BY DATUM B"	04-24-17	MV	KB
095	C22	CHANGED ISO VIEW SCALE TO 4:1, WAS 1:1			
095	C21	ADDED PARTING LINE NOTE TO DETAIL A, REMOVED NOTE BACK ANGLE OPTIONAL FROM 5°			
095	C20	CORRECTED CHRYSLER GROUP LLC NOMENCLATURE ADDED LEGAL NOTE AND EWCAP TO TITLE BLOCK			
095	C19	MOVED NOTE TO SECTION B-B			
095	C18	UPDATED NOTES			
095	C17	ADDED 0.25° MAX DRAFT ANGLE ALL AROUND			
095	C16	ADDED 5.50			
095	C15	ADDED AT TANGENT NOTE			
095	C14	REMOVED DATUM D			
095	C13	ADDED BASIC DIMENSIONS FOR PROFILE CONTROL			
095	C12	ADDED 0.20 A B			
095	C11	DIMENSION TO DATUM A			
095	C10	SEALING SURFACE DIMENSIONS MOVED TO SECTION C-C			
095	C9	ADDED SECTION C-C			
095	C8	REMOVED 15.20 AND 2.50 FROM SECTION A-A			
095	C7	ADDED DRAFT ANGLE DIRECTION			
095	C6	REMOVED 0.80 +0.10/-0.20 ALL AROUND			
095	C5	REPLACED WALL THICKNESS CONTROL WITH PROFILE OF A SURFACE			
095	C4	ADDED R(6.47)			
095	C3	ADDED 0.70±0.15 ALL AROUND			
095	C2	UPDATED CONNECTOR COLORS			
095	C1	SURFACE 'D' RELOCATED TO 3.50 WAS AT 8.20			
	B3	REMOVED EWCAP FROM THE TITLE BLOCK			
	B2	REMOVED LEGAL NOTICE			
	B1	ANGEL 40° WAS 60° -4 PLACES (A4-D4)	03-26-12	KC	MV
	A	RELEASED	10-31-02	MV	DG
CHANGE SERIAL NUMBER	LET	REVISION RECORD	DATE	DWN	CHK

C2

EWCAP P/N	OPTION	MATING CONNECTOR COLOR
150-S-004-2-D02	D	BLACK
150-S-004-2-C02	C	DK GRAY
150-S-004-2-B02	B	LT GRAY
150-S-004-2-A02	A	BLACK

TOLERANCES (UNLESS OTHERWISE SPECIFIED)
DIMENSIONS ARE IN MILLIMETERS
ANGLES ±3°
.X ±0.2 .XX ±0.10

THIRD ANGLE PROJECTION

EWCAP

SCALE	DRAWN BY	CHECKED BY	DATE
4 - 1	K. CUNNINGHAM	M.VANSLAMBROUCK	03-26-12

TITLE
DIRECT CONNECT INTERFACE
4 WAY (2 X 2) 1.5MM SEALED MALE

SHEET	DRAWING NUMBER	SIZE		REVISION LEVEL
OF 1	150-S-004-2-Z02	E	DO NOT SCALE DRAWING COMPUTER AIDED DRAWING	D