THIS DRAWING IS UNPUBLISHED. RELEASED FOR PUBLICATION ,19 .
© COPYRIGHT 19 BY - ALL RIGHTS RESERVED.

| LOC | DIST |
|---|---|
| DY | - |

REVISIONS

| P | LTR | DESCRIPTION | DATE | DWN | APVD |
|---|---|---|---|---|---|
| | N3 | REVISED PER ECO-11-005139 | 19MAR11 | RK | HMR |

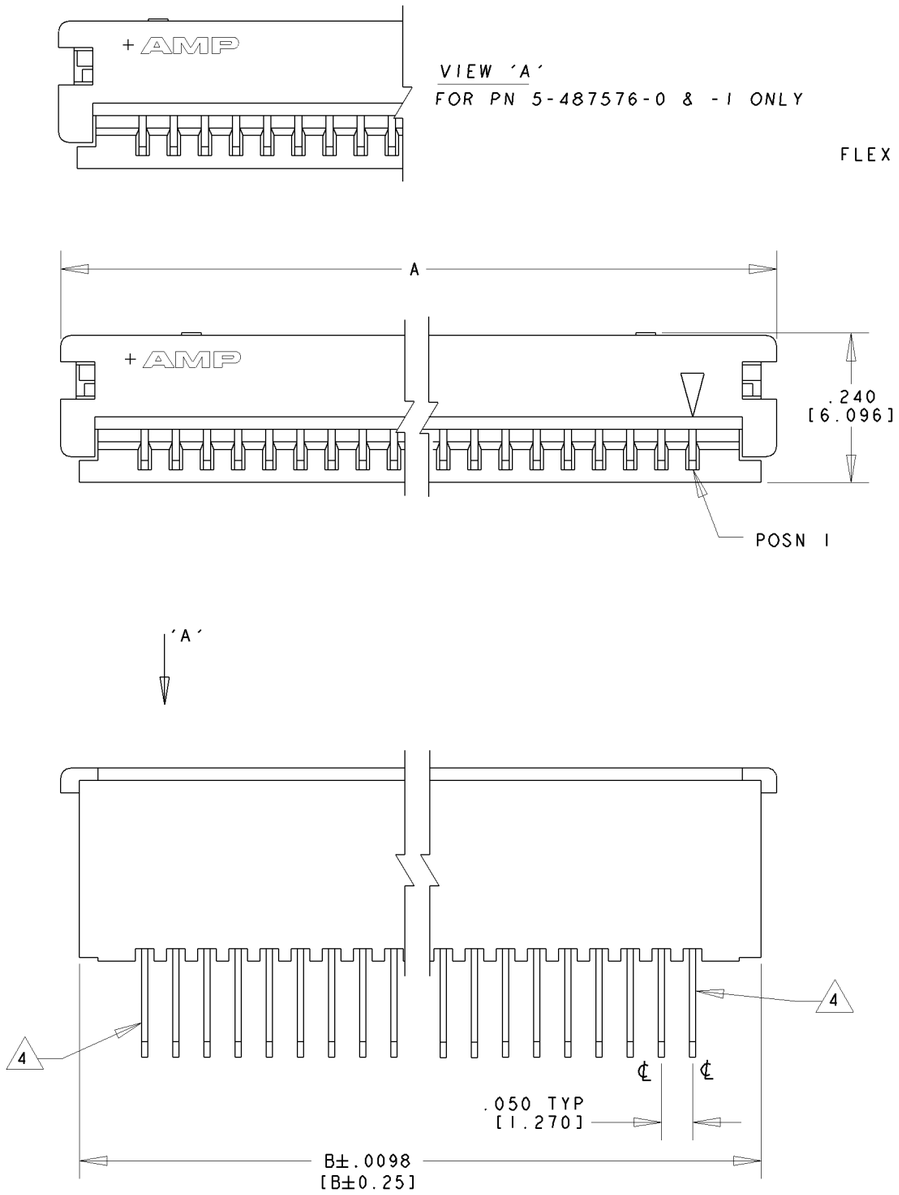


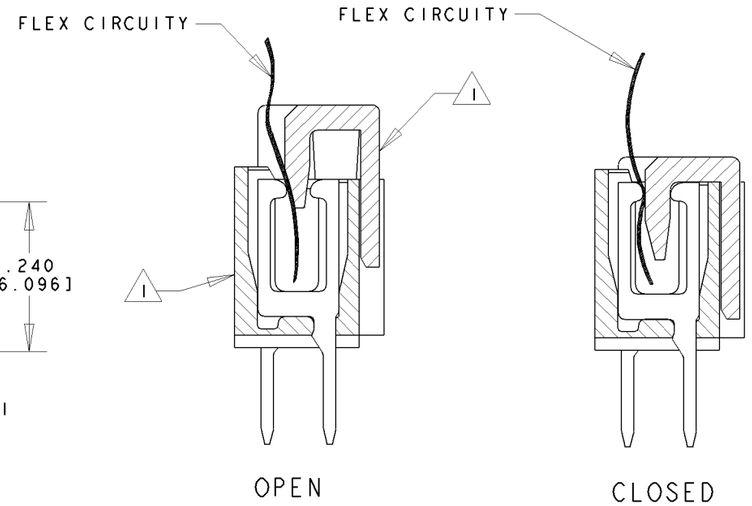


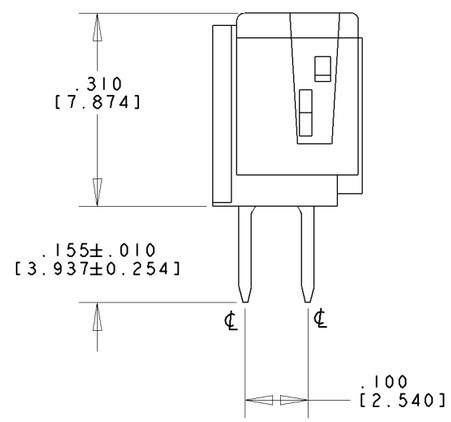


| 4 #NO | B | A | NO OF POSN | PART NUMBER |
|---|---|---|---|---|
| 1 & 17 | 1.010 [25.654] | 1.070 [27.178] | 17 | 5-487576-9 |
| 1 & 11 | .710 [18.034] | .770 [19.558] | 11 | 5-487576-3 |
| | .460 [11.684] | .520 [13.208] | | 5-487576-1 |
| | .410 [10.414] | .470 [11.938] | | 5-487576-0 |
| | .560 [14.224] | .620 [15.748] | 6 | 4-487576-9 |
| | .510 [12.954] | .570 [14.478] | 5 | 4-487576-8 |
| | 2.910 [73.914] | 2.970 [75.438] | 55 | 4-487576-7 |
| | 2.860 [72.644] | 2.920 [74.168] | 54 | 4-487576-6 |
| | 2.810 [71.374] | 2.870 [72.898] | 53 | 4-487576-5 |
| | 2.760 [70.104] | 2.820 [71.628] | 52 | 4-487576-4 |
| | 2.710 [68.834] | 2.770 [70.358] | 51 | 4-487576-3 |
| | 2.660 [67.564] | 2.720 [69.088] | 50 | 4-487576-2 |
| | 2.610 [66.294] | 2.670 [67.818] | 49 | 4-487576-1 |
| | 2.560 [65.024] | 2.620 [66.548] | 48 | 4-487576-0 |
| | 2.510 [63.754] | 2.570 [65.278] | 47 | 3-487576-9 |
| | 2.460 [62.484] | 2.520 [64.008] | 46 | 3-487576-8 |
| | 2.410 [61.214] | 2.470 [62.738] | 45 | 3-487576-7 |
| | 2.360 [59.944] | 2.420 [61.468] | 44 | 3-487576-6 |
| | 2.310 [58.674] | 2.370 [60.198] | 43 | 3-487576-5 |
| | 2.260 [57.404] | 2.320 [58.928] | 42 | 3-487576-4 |
| | 2.210 [56.134] | 2.270 [57.658] | 41 | 3-487576-3 |
| | 2.160 [54.864] | 2.220 [56.388] | 40 | 3-487576-2 |
| | 2.110 [53.594] | 2.170 [55.118] | 39 | 3-487576-1 |
| | 2.060 [52.324] | 2.120 [53.848] | 38 | 3-487576-0 |
| | 2.010 [51.054] | 2.070 [52.578] | 37 | 2-487576-9 |
| | 1.960 [49.784] | 2.020 [51.308] | 36 | 2-487576-8 |
| | 1.910 [48.514] | 1.970 [50.038] | 35 | 2-487576-7 |
| | 1.860 [47.244] | 1.920 [48.768] | 34 | 2-487576-6 |
| | 1.810 [45.974] | 1.870 [47.498] | 33 | 2-487576-5 |
| | 1.760 [44.704] | 1.820 [46.228] | 32 | 2-487576-4 |
| | 1.710 [43.434] | 1.770 [44.958] | 31 | 2-487576-3 |
| | 1.660 [42.164] | 1.720 [43.688] | 30 | 2-487576-2 |
| | 1.610 [40.894] | 1.670 [42.418] | 29 | 2-487576-1 |
| | 1.560 [39.624] | 1.620 [41.148] | 28 | 2-487576-0 |
| | 1.510 [38.354] | 1.570 [39.878] | 27 | 1-487576-9 |
| | 1.460 [37.084] | 1.520 [38.608] | 26 | 1-487576-8 |
| | 1.410 [35.814] | 1.470 [37.338] | 25 | 1-487576-7 |
| | 1.360 [34.544] | 1.420 [36.068] | 24 | 1-487576-6 |
| | 1.310 [33.274] | 1.370 [34.798] | 23 | 1-487576-5 |
| | 1.260 [32.004] | 1.320 [33.528] | 22 | 1-487576-4 |
| | 1.210 [30.734] | 1.270 [32.258] | 21 | 1-487576-3 |
| | 1.160 [29.464] | 1.220 [30.988] | 20 | 1-487576-2 |
| | 1.110 [28.194] | 1.170 [29.718] | 19 | 1-487576-1 |
| | 1.060 [26.924] | 1.120 [28.448] | 18 | 1-487576-0 |
| | 1.010 [25.654] | 1.070 [27.178] | 17 | 487576-9 |
| | .960 [24.384] | 1.020 [25.908] | 16 | 487576-8 |
| | .910 [23.114] | .970 [24.638] | 15 | 487576-7 |
| | .860 [21.844] | .920 [23.368] | 14 | 487576-6 |
| | .810 [20.574] | .870 [22.098] | 13 | 487576-5 |
| | .760 [19.304] | .820 [20.828] | 12 | 487576-4 |
| | .710 [18.034] | .770 [19.558] | 11 | 487576-3 |
| | .660 [16.764] | .720 [18.288] | 10 | 487576-2 |
| | .610 [15.494] | .670 [17.018] | | 487576-1 |

1. FLAME RETARDANT THERMOPLASTIC; COLOR-BLACK
2. FINISH: .000150[0.00381mm] MIN THK TIN OVER .000050[0.00127mm] MIN THK NICKEL ON ENTIRE CONTACT.
3. CONNECTOR SUPPLIED IN CLOSED CONDITION.
4. #NO. OF CONTACTS NOT TO BE LOADED.
5. PRODUCT SPEC: 108-16025
6. APPLICATION SPEC: 114-16009
7. PACKAGING SPEC: 107-51005

DIMENSIONS: INCHES[mm]

TOLERANCES UNLESS OTHERWISE SPECIFIED:
0 PLC ±-
1 PLC ±-
2 PLC ±-
3 PLC ±.005 [0.127]
4 PLC ±-
ANGLES ±-

MATERIAL
HOUSING & STUFFER: 1
CONTACTS: PHOS BRONZE

FINISH
CONTACTS: 2

DWN SCOTT A. SHUEY 12SEP88
CHK J. ENGLISH 27SEP88
APVD SF LEONG
PRODUCT SPEC -
APPLICATION SPEC -
WEIGHT -

CUSTOMER DRAWING

TE Connectivity

NAME CONNECTOR ASSEMBLY, ZIF-LINE 50

| SIZE | CAGE CODE | DRAWING NO |
|---|---|---|
| A3 | 00779 | C-487576 |

SCALE 4:1 SHEET 1 OF 1 REV N3