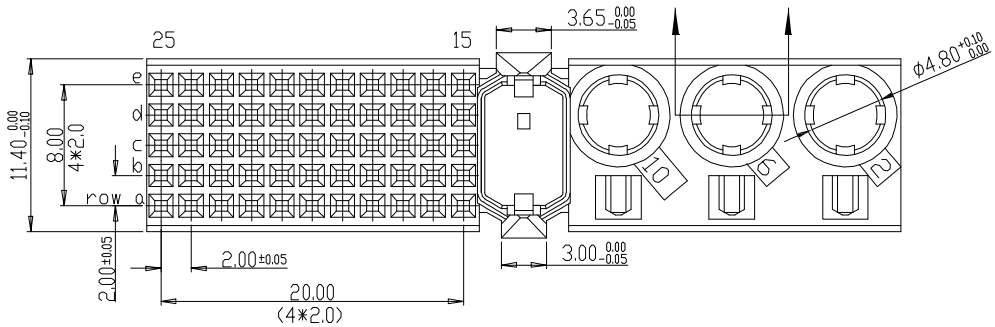

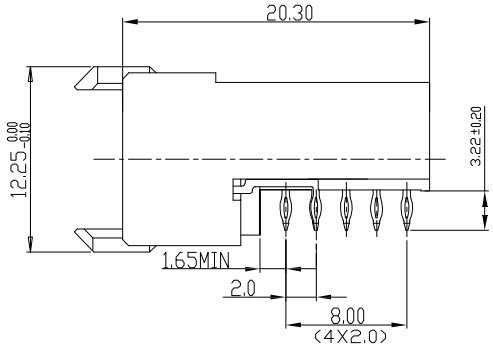

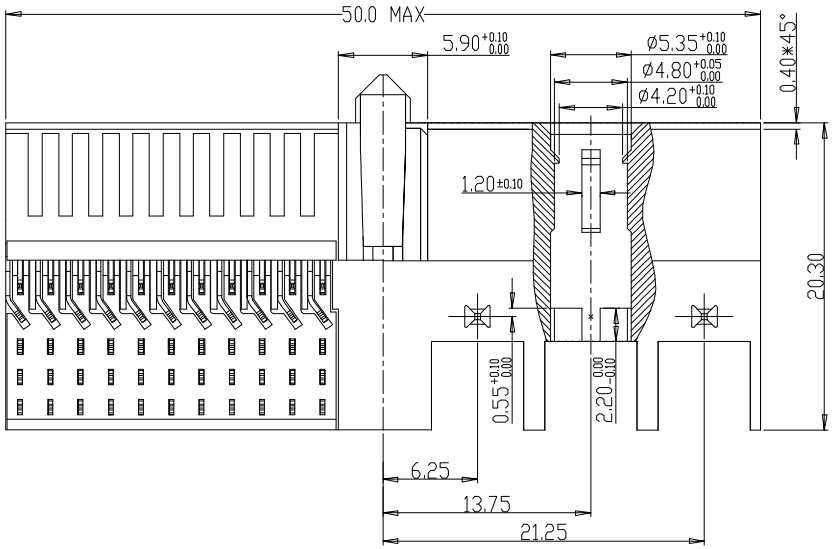

PERFORMANCE CHARACTERISTICS

CURRENT RATING: 1.5 A AT 20°C (FULLY LOADED)
1 A AT 70°C (FULLY LOADED)

RATED VOLTAGE:500 V AC (CONT /CONT)

OPERATING TEMPERATURE : -55°C TO 125°C

CONTACT RESISTANCE :20 mΩ MAX

INSERTION FORCE: 0.75N MAX/CONT

EXTRACTION FORCE : 0.15N MIN /CONT

INSULATION RESISTANCE: 10^4 MΩ MIN

NOTES

1. LEAD FREE INDICATOR :LF=LEAD FREE
PERFORMANCE LEVEL INDICATIOR
(REF DWG NO.BS.C.201844.003

2. THIS PRODUCT IS CSA APPROVED.
THIS PRODUCT IS UL RECOGNIZED.

3.FOR RECOMMENDED PTH DIMENSIONS REFER DRAWING :BS.A.201572.001

4.THIS PRODUCT (LF) MEETS EUROPEAN UNION DIRECTIVES AND OTHER COUNTRY REGULATIONS AS DESCRIBED IN GS-22-008

LAY-OUT
P.C.B.- HOLE

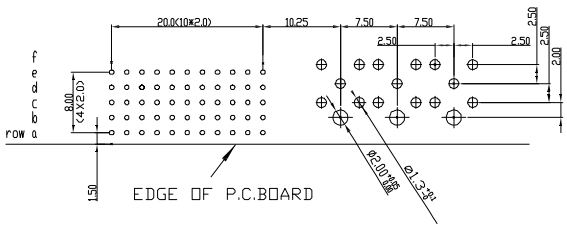

rev	ecn no	dr	date
A	CONVERSION REVISION 03	BKP	16-02-04
B	DG05-0381	Kasor	10-10-05
C	DG10-0110	NZ	2010.9.3

Material			Spec ref		
Mat code			tolerance: 1DEC±0.2 1DEC 2DEC ± 0.10 2DEC ANGLES±1°HOEKEN	projection	MM
Heattreat					
Plating/Finish					
Dr	W.Panis	070492		size A4	Scale 1.500
Eng			Product family MILLIPICS		
Chr			Model Name	ECN	
Appr			Model Revision	REL Level	
FCI	title MPACS 5+2R RA RCP CONN TYPE M			dwg no BS,C ,201418,024	Rev. C
Pro/E file	catalog no HM2R50PA5100----			CUMSTOMER	sheet 1 of 1

Tous droits strictement reserves. Reproduction ou communication a des tiers interdite sous quelque forme que ce soit sans autorisation ecrite du propietaire. Propriete de c FCI. Droits de reproduction FCI.

All rights strictly reserved. Reproduction or issue to third parties in any form whatever is not permitted without written authority from the proprietor. Property of FCI. Copyright FCI.

1 2 3 4

PDM: Rev:C STATUS:Released Printed: Mar 15, 2011