THIS DRAWING IS UNPUBLISHED. RELEASED FOR PUBLICATION -,- .
© COPYRIGHT - By - ALL RIGHTS RESERVED.

LOC	DIST
AF	50

REVISIONS

P	LTR	DESCRIPTION	DATE	DWN	APVD
	J	REVISED PER ECR-13-004343	30JUL13	KH	KR

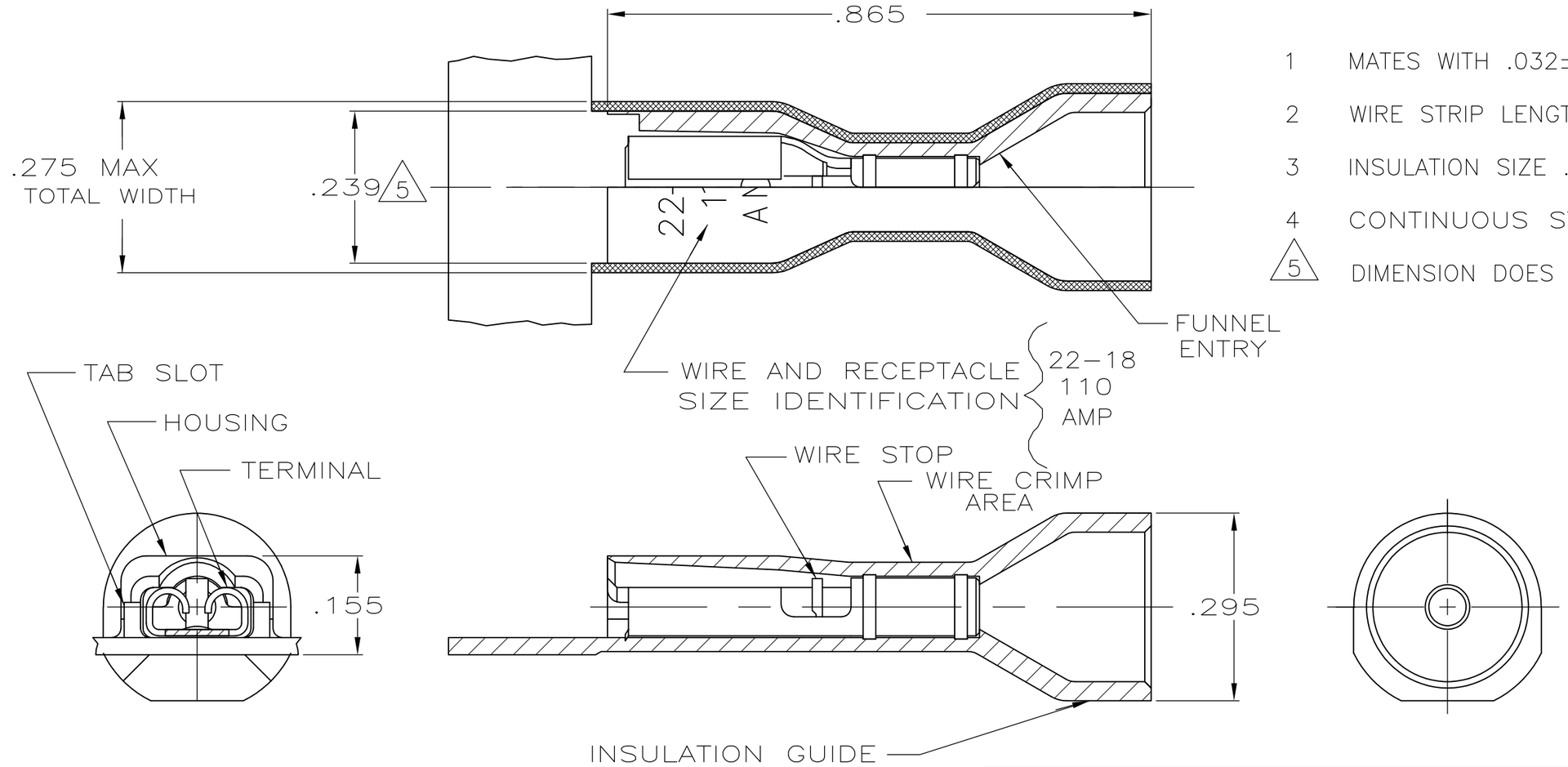

1 MATES WITH .032±.001 X .110 OR .125 TABS.

2 WIRE STRIP LENGTH .281

3 INSULATION SIZE .230 MAX DIA

4 CONTINUOUS STRIP ON REELS

5 DIMENSION DOES NOT INCLUDE TRIM BURR

MATERIAL & FINISH	PART NUMBER
HOUSING:NYLON,COLOR-RED TRANSLUCENT RECEPTACLE:BRASS TIN	2-520310-2

THIS DRAWING IS A CONTROLLED DOCUMENT.

DIMENSIONS: INCHES

TOLERANCES UNLESS OTHERWISE SPECIFIED:

0 PLC	± -
1 PLC	± -
2 PLC	± -
3 PLC	± .015
4 PLC	± -
ANGLES	± -

MATERIAL: SEE TABLE

FINISH: SEE TABLE

DWN	P FORTNEY	5/8/89
CHK	MS FEHER	5/8/89
APVD	K RANDOLPH	5/8/89
PRODUCT SPEC	108-2043	
APPLICATION SPEC	114-2123	
WEIGHT	-	

TE Connectivity

NAME: RECEPTACLE ASSY,ULTRA-FAST, .110/.125 SERIES, 22-18 AWG

SIZE	CAGE CODE	DRAWING NO	RESTRICTED TO
A3	00779	C-520310	-

CUSTOMER DRAWING | SCALE 5:1 | SHEET 1 OF 1 | REV J

1470-19 (3/11)