CUSHCRAFT
COMMUNICATIONS ANTENNAS

ALLPMTB

WALL MOUNT CONFIGURATION

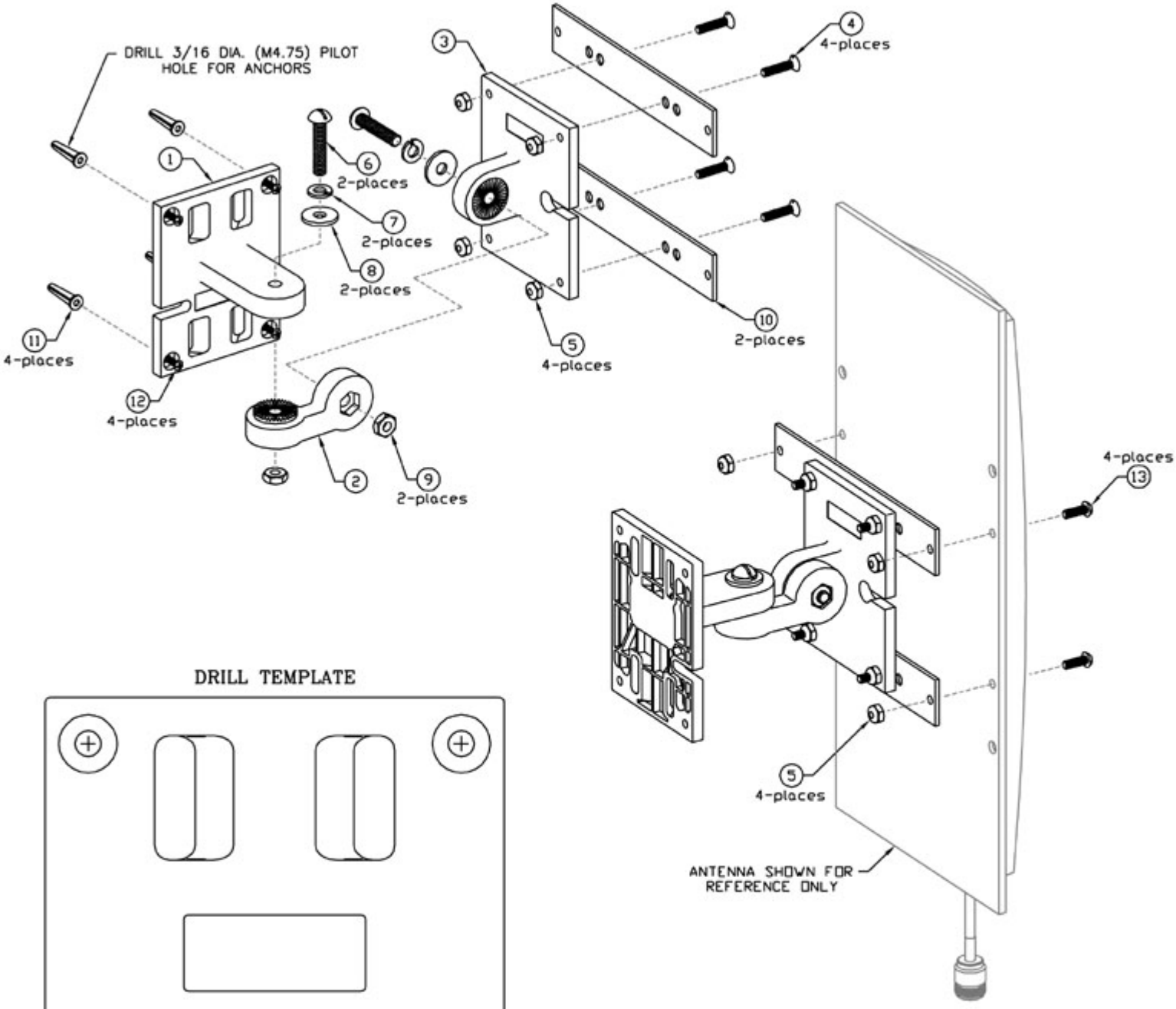

DRILL TEMPLATE

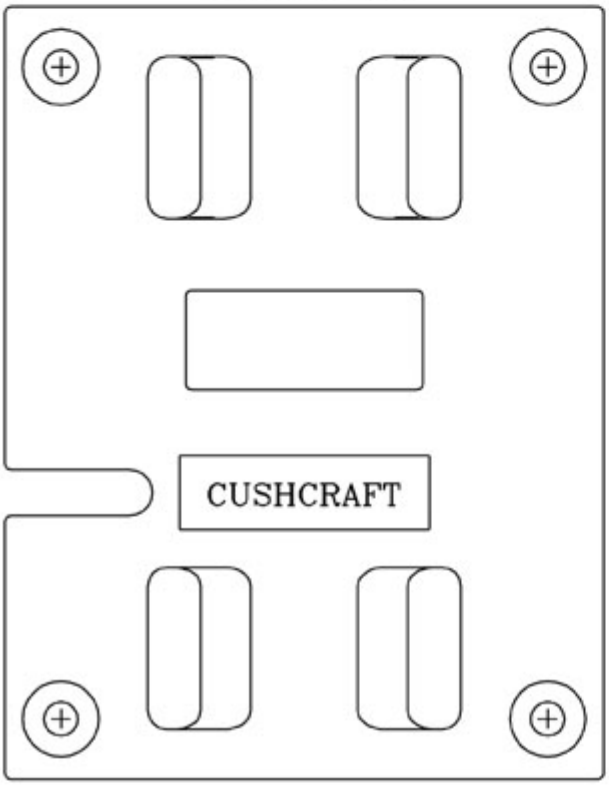

PARTS LIST

MARK	PART #	QTY.	DESCRIPTION
13	010079	4	#8-32 X 1/2" SS RH MACHINE SCREW
12	014466	4	#8-18 X 3/4" SS SELF-TAPPING MS
11	154465	4	#8 PLASTIC WALL ANCHOR
10	195017	2	ALUMINUM MOUNTING STRAP
9	010085	2	1/4-20 SS HEX NUT
8	010104	2	1/4 SS FLAT WASHER
7	010084	2	1/4 SS SPLIT LOCK WASHER
6	010083	2	1/4-20 X 1-1/4 MACHINE SCREW
5	014387	8	#8-32 SS/NYLON HEX NUT
4	015020	4	#8-32 X 5/8 SS FH MACHINE SCREW
3	154836	1	MOLDED ANTENNA MOUNT
2	154834	1	MOLDED ARTICULATING ARM
1	154835	1	MOLDED WALL/MAST MOUNT