PRODUCT N°	HOUSING	DIM"C"	DIM"D"	NB. OF TER.	CONTACT PLACED IN CAVITY (TABLE ACCORDING VIEW A)																											
					1	2	3	4	5	6	7	8	9	10	11	12	13	14	15	16	17	18	19	20	21	22	23	24	25	26	27	28
95234–Y01(LF)	1 X 28 pos.	68.58	71.04	14	X		X		X		X		X		X		X		X		X		X		X		X		X		X	
95234–Y02(LF)	1 X 13 pos.	30.48	32.94	10	X	X	X	X	X				X	X	X	X	X															
95234–Y03(LF)	1 X 3 pos.	5.08	7.54	2	X		X																									
95234–Y04(LF)	1 X 7 pos.	15.24	17.70	4	X		X		X		X																					

WHEN NEEDED, SUFFIX LETTER "LF" INDICATES THE PRODUCT IS RoHS COMPATIBLE, SEE NOTE 4

RECOMMENDED HOLES PATTERN

RECOMMENDED PC BOARD THICKNESS: 1.6 mm

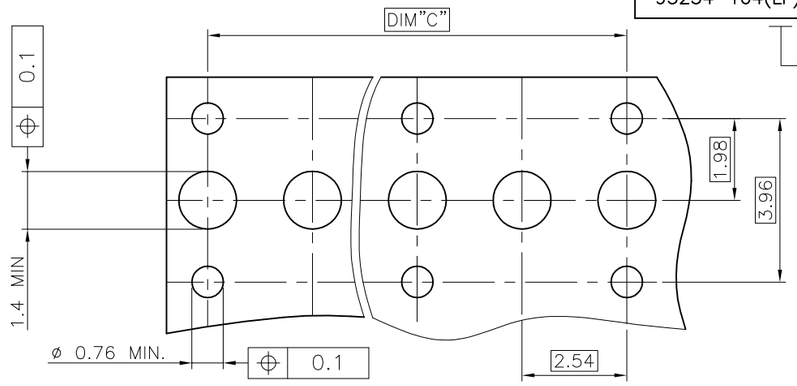

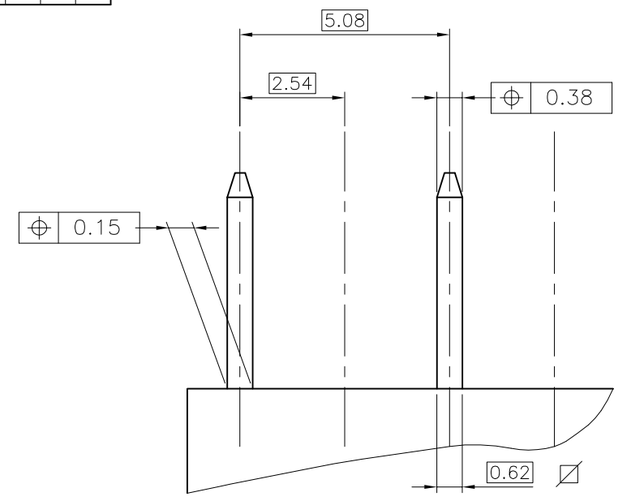

RECOMMENDED PINS PATTERN

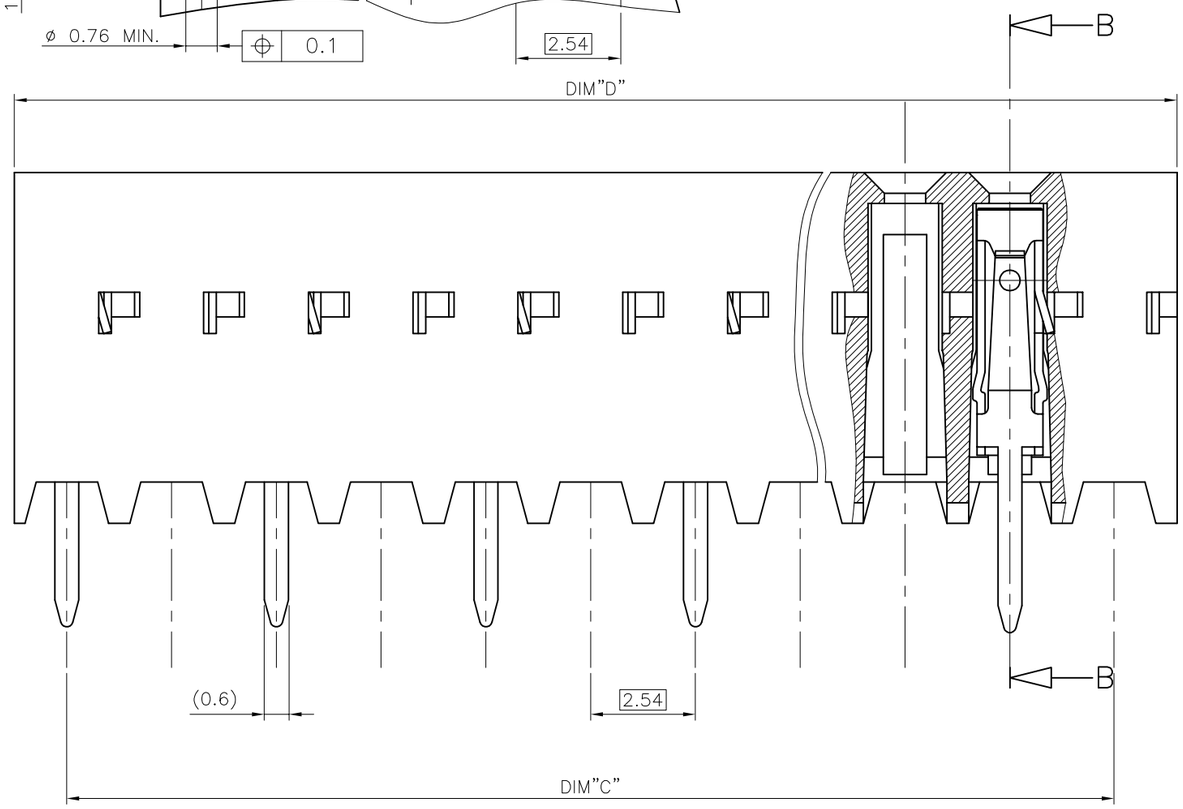

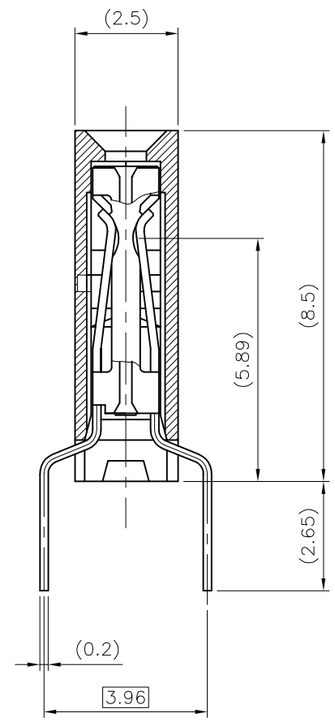

SECTION B–B

NOTES:

1 – MATERIAL HOUSING: THERMOPLASTIC POLYESTER 30% GLASS FILLED, COLOUR BLUE. FLAME RETARDANT PER UL–94 CATEGORY V0.

2 – MATERIAL TERMINAL: PHOSPHOR BRONZE EXTRA HARD.

3 – CONNECTOR TO BE USED ON PC BOARD WITH NON PLATED THROUGH HOLES

4 – RoHS COMPATIBLE PRODUCT SPECIFICATIONS

a – PLATING:

– "LF" MEANS THE PRODUCT IS LEAD–FREE, 2µm MINIMUM MATTE TIN OVER 1.27µm MINIMUM NICKEL UNDERPLATE.

b – MANUFACTURING PROCESS COMPATIBILITY

– THE HOUSING WILL WITHSTAND EXPOSURE TO 260°C ±5°C SOLDER BATH TEMPERATURE FOR 5 SECONDS IN A WAVE SOLDER APPLICATION WITH A 1.6mm MIN THICK CIRCUIT BOARD.

c – LABELING:

– MEETS PACKAGING SPECS AS PER GS–14–920

d – LEGAL STATEMENT: SEE GS–22–008

95234–4XX	5 µm SnPb	SnPb
95234–3XX	0.76 µm GOLD	SnPb
PLATING CODE	CONTACT AREA	SOLDER TAIL
	PLATING THICKNESS OVER 1.27µm Ni	

95234–4XXLF	5 µm Sn	Sn
95234–3XXLF	0.76 µm GOLD	Sn
PLATING CODE	CONTACT AREA	SOLDER TAIL
	PLATING THICKNESS OVER 1.27µm Ni	

ltr	ecn no	dr	date
H	F07–0271	LMU	07.12.06
C	F90134	DLE	99.02.10
D	F10733	PNZ	01.12.13
E	F03–0284	DLE	03.10.15
F	F04–0347	DLE	04.11.15
G	F06–0204	DLE	06.06.28

mat'l. code: SEE NOTES

surface: ISO 1302 — tolerance: ISO 406 ISO 101

tolerances unless otherwise specified: angles ±2°; linear ±0.3

projection: mm — scale 10:1

dr	D.LEGRAND	95.11.17
engr	P.NIZZI	95.11.17
chr	D.LEGRAND	95.11.17
appd	PNZ	95.11.17

product family: DX VCC SR

title: DUAL ENTRY S.L OFF SET LEGS

dwg no: 95234 — sheet 1 of 1 — size A2

type: CUSTOMER Drawing

sheet index — revision sheet

form: A2

R:\Public\Engineering\Product\ELX\f07-0271\95234c01.dwg

FCIconnect.com
Copyright FCI

PDM: Rev:H STATUS: Released Printed: Jun 08, 2009