THIS DRAWING IS UNPUBLISHED. RELEASED FOR PUBLICATION -,- .
© COPYRIGHT - BY TYCO ELECTRONICS CORPORATION. ALL RIGHTS RESERVED.

LOC	DIST
G	86

REVISIONS

P	LTR	DESCRIPTION	DATE	DWN	APVD
	D1	REV PER ECR 08-015124	13JUN08	JR	CK

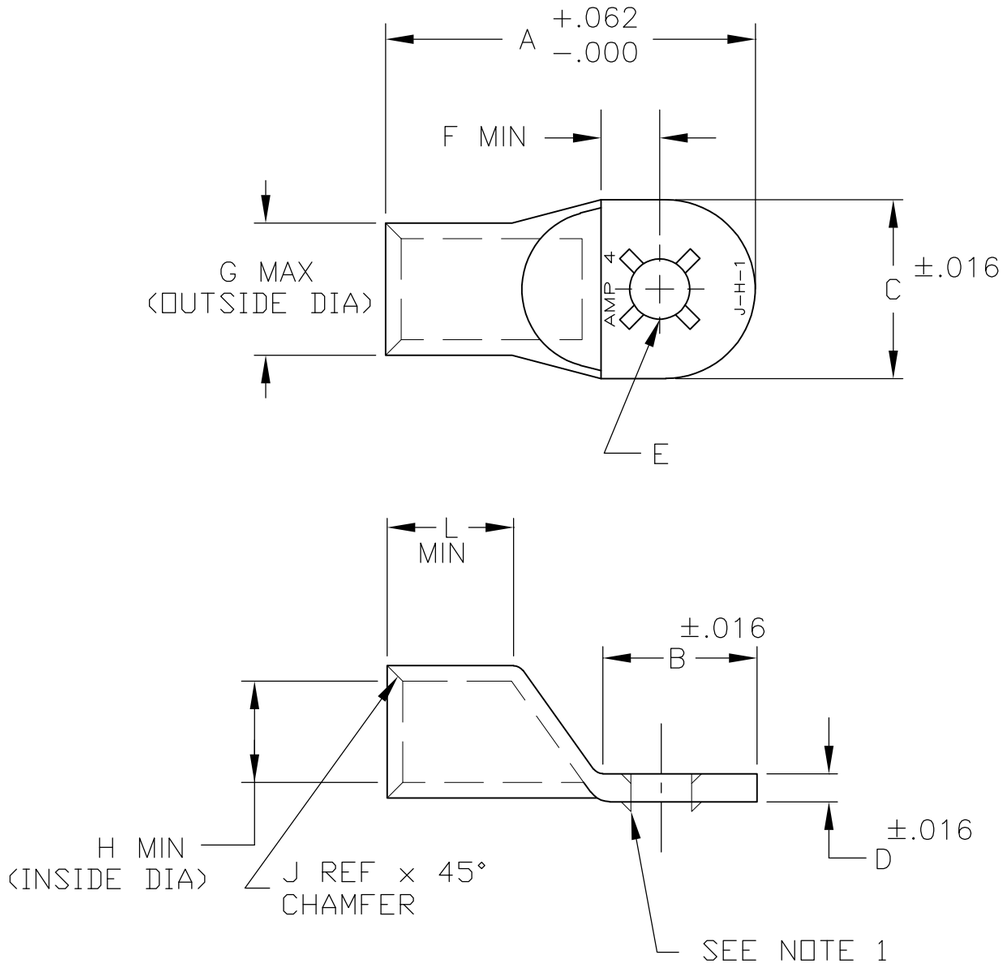

1. LOCKING LANCE FOR P/N -3 ONLY.

BOLT HOLE SIZE	L	J	H	G	F	E	D	C	B	A	PART NUMBER
	DIMENSIONS, INCHES										
.375	.748 MIN	.032	.301	.454	.429	ø.394	.138	.630	.843	1.925	606289-5
.500	.748 MIN	.032	.301	.454	.543	ø.512	.109	.750	1.075	2.187	606289-4
.375	.748 MIN	.032	.301	.454	.424	ø.394	.141	.641	.831	1.906	606289-3
.312	.748 MIN	.032	.301	.454	.356	ø.328	.141	.641	.732	1.813	606289-2
.250	.748 MIN	.032	.301	.454	.309	ø.265	.141	.641	.591	1.693	606289-1

THIS DRAWING IS A CONTROLLED DOCUMENT.

DIMENSIONS: INCHES

TOLERANCES UNLESS OTHERWISE SPECIFIED:
0 PLC ±
1 PLC ±
2 PLC ± .02
3 PLC ± .005
4 PLC ± .0005
ANGLES ± 3°

MATERIAL: HIGH CONDUCTIVITY WROUGHT COPPER

FINISH: ELECTRO TIN PLATE

DWN L.HALL 18APR00
CHK L.H. SMITH 12MAY00
APVD B. ANTHONY 12MAY00
PRODUCT SPEC
APPLICATION SPEC
WEIGHT

CUSTOMER DRAWING

Tyco Electronics
Tyco Electronics Corporation
Harrisburg, PA 17105

NAME: AMP TUBULAR TERMINAL 4 AWG

SIZE A3 | CAGE CODE 00779 | DRAWING NO C-606289 | RESTRICTED TO

SCALE 1:1 | SHEET 1 OF 1 | REV D1

OBSOLETE
NOT the LATEST REVISION