THIS DRAWING IS UNPUBLISHED. RELEASED FOR PUBLICATION 2006
© COPYRIGHT 2006 ALL RIGHTS RESERVED.

| LOC | DIST |
|---|---|
| A1 | – |

REVISIONS

| P | LTR | DESCRIPTION | DATE | DWN | APVD |
|---|---|---|---|---|---|
| | J4 | ECO-11-005294 | 27APR11 | RK | HMR |
| | J5 | ECR-15-003938 | 26MAR2015 | RK | MKO |
| | J6 | ECR-16-016696 | 15SEP2017 | GA | MKO |
| | J7 | ECR-16-016780 | 15NOV2017 | GR | MKO |

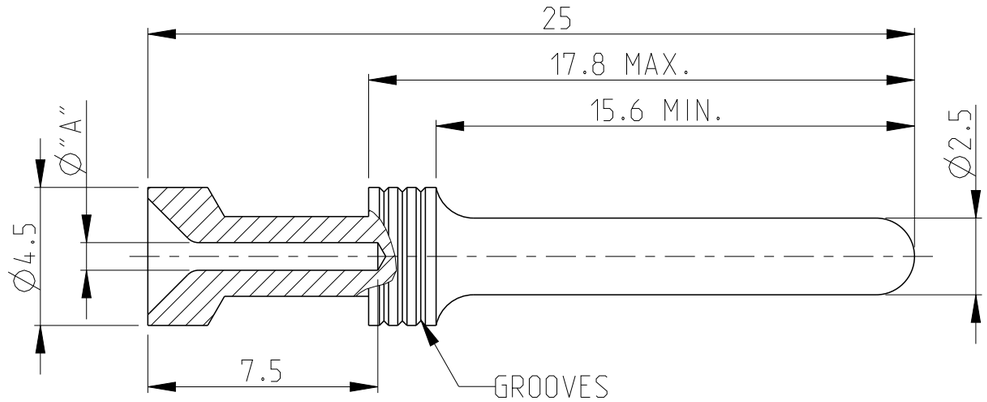


Notes

1. MATERIAL: BRASS
2. FINISH SILVER PLATING: 2 µm Ag MIN. OVER Cu
3. FINISH GOLD PLATING: 0.75 µm Au MIN. OVER Ni
4. FINISH TIN PLATING: 0.6 µm Sn MIN. OVER Cu
5. VENTILATION HOLE PRESENT ON AL PARTS
6. WEIGHT: 1.35 g, PER PIECE (APPROX.)
7. PACKAGING: 50 PIECES IN POLYBAG
8. PACKAGING: 500 PIECES IN POLYBAG & CARTON
9. PACKAGING: 5000 PIECES IN POLYBAG & CARTON
10. PACKAGING: 20000 PIECES IN POLYBAGS & CARTONS
11. SUITABLE SOCKET CONTACT: CUSTOMER DRAWING 1105101
12. SUITABLE INSERTS: SERIES HA, HE, HVE, HVS, CUSTOMER DRAWING
13. SUITABLE CRIMP TOOL: PN 1-1105851-8
14. SUITABLE INSERTION TOOL: PN 0-1102855-6
15. SUITABLE EXTRACTION TOOL: PN 0-1102855-7
16. STANDARDS: DIN EN 61984, DIN EN 60664-1

17. OBSOLETE

| ORDERING TEXT | PLATING | CROSS SECTION [MM²] | DIMS "A" | NO.OF GROOVES / MARKINGS | 7 P.U.=50 BAG | 8 P.U.=500 BOX | 9 P.U.=5000 BOX | 10 P.U.=20000 BOX |
|---|---|---|---|---|---|---|---|---|
| HE/HA-C-Sti.Sn 4,0mm² | TIN 4 | 4.0 | 2.8 | – | – | ~~5-0~~ 17 | – | 5-3 |
| HE/HA-C-Sti.Sn 2,5mm² | TIN 4 | 2.5 | 2.2 | 3 | – | ~~4-0~~ 17 | – | 4-3 |
| HE/HA-C-Sti.Sn 1,5mm² | TIN 4 | 1.5 | 1.7 | 2 | – | ~~3-0~~ 17 | – | 3-3 |
| HE/HA-C-Sti.Au 4,0mm² | GOLD 3 | 4.0 | 2.8 | – | 5-2 | ~~5-9~~ 17 | – | – |
| HE/HA-C-Sti.Au 2,5mm² | GOLD 3 | 2.5 | 2.2 | 3 | 4-2 | ~~4-9~~ 17 | – | – |
| HE/HA-C-Sti.Au 1,5mm² | GOLD 3 | 1.5 | 1.7 | 2 | 3-2 | ~~3-9~~ 17 | – | – |
| HE/HA-C-Sti.Au 0,75-1,0mm² | GOLD 3 | 0.75-1.0 | 1.4 | 1 | 2-2 | ~~2-9~~ 17 | – | – |
| HE/HA-C-Sti.Au 0,5mm² | GOLD 3 | 0.5 | 1.1 | – | 1-2 | ~~1-9~~ 17 | – | – |
| HE/HA-C-Sti.Au 0,14-0,37mm² | GOLD 3 | 0.14-0.37 | 0.9 | 3 | 6-2 | ~~6-9~~ 17 | – | – |
| HE/HA-C-Sti.Ag 4,0mm² | SILVER 2 | 4.0 | 2.8 | – | 5-1 | ~~5-8~~ 17 | – | – |
| HE/HA-C-Sti.Ag 2,5mm² | SILVER 2 | 2.5 | 2.2 | 3 | 4-1 | 4-8 | 7-1 | – |
| HE/HA-C-Sti.Ag 1,5mm² | SILVER 2 | 1.5 | 1.7 | 2 | 3-1 | ~~3-8~~ 17 | – | – |
| HE/HA-C-Sti.Ag 0,75-1,0mm² | SILVER 2 | 0.75-1.0 | 1.4 | 1 | 2-1 | ~~2-8~~ 17 | – | – |
| HE/HA-C-Sti.Ag 0,5mm² | SILVER 2 | 0.5 | 1.1 | – | 1-1 | ~~1-8~~ 17 | – | – |
| HE/HA-C-Sti.Ag 0,14-0,37mm² | SILVER 2 | 0.14-0.37 | 0.9 | 3 | 6-1 | ~~6-8~~ 17 | – | – |

PARTS LIST

THIS DRAWING IS A CONTROLLED DOCUMENT.

DIMENSIONS: mm

TOLERANCES UNLESS OTHERWISE SPECIFIED:
0 PLC ±-
1 PLC ±-
2 PLC ±-
3 PLC ±-
4 PLC ±-
ANGLES ±0.5°

MATERIAL 1

FINISH 2 3 4

DWN H.BRAUN 21Apr2010
CHK –
APVD T.SCHNURPFEIL 29AUG2007
PRODUCT SPEC 108-74004
APPLICATION SPEC 114-74003
WEIGHT –

TE Connectivity

NAME PIN CONTACT SERIES HA, HE, HVE

| SIZE | CAGE CODE | DRAWING NO | RESTRICTED TO |
|---|---|---|---|
| A3 | 00779 | C-1105100 | – |

Customer Drawing | SCALE 5:1 | SHEET 1 OF 1 | REV J7

1470-19 (3/11)