THIS DRAWING IS UNPUBLISHED. RELEASED FOR PUBLICATION 20
© COPYRIGHT 20 BY - ALL RIGHTS RESERVED.

REVISIONS

P	LTR	DESCRIPTION	DATE	DWN	APVD
	C2	REVISED PER ECO-14-009692	7JAN2015	CW	SH

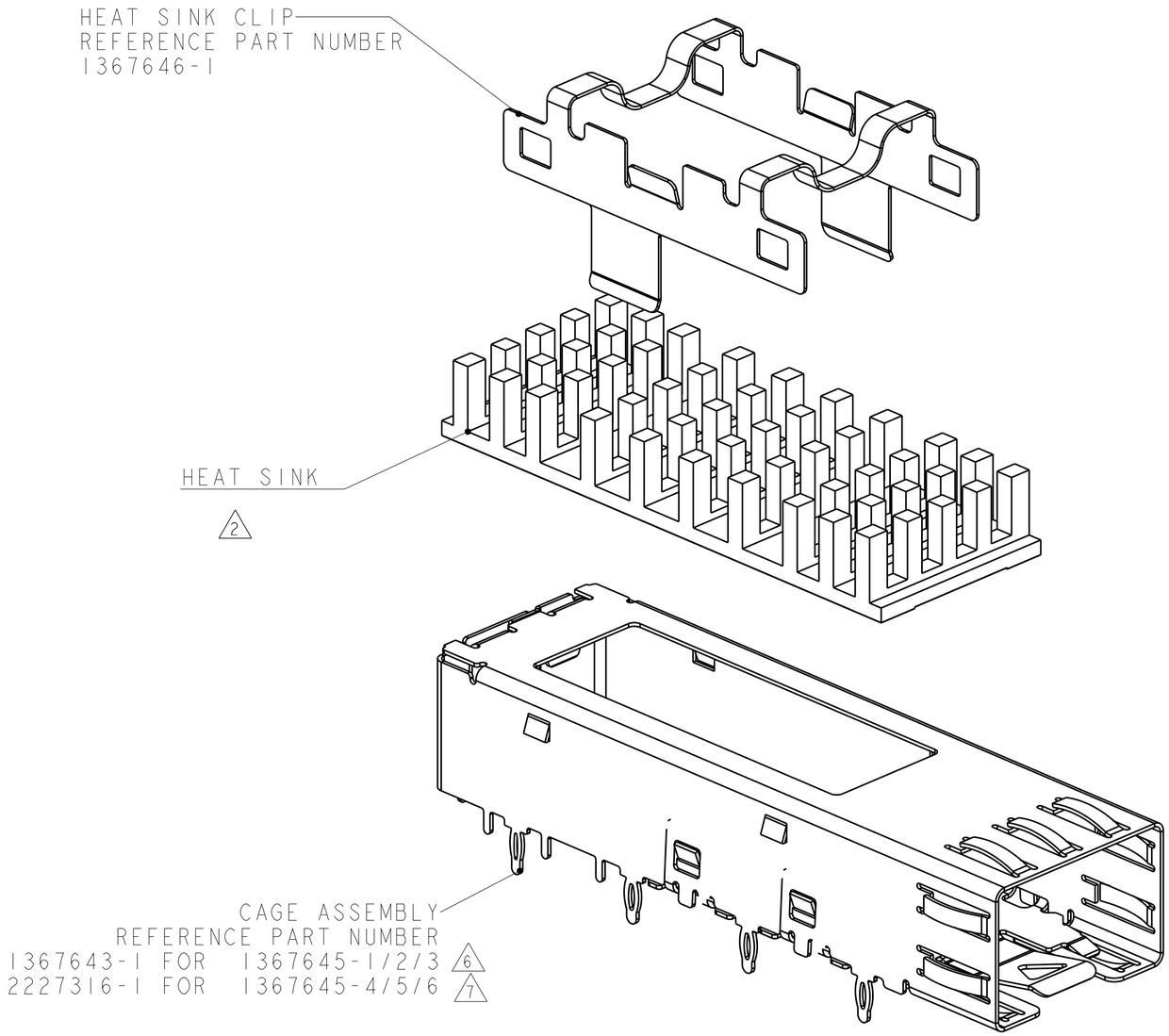

1. CAGE ASSEMBLY, HEAT SINK CLIP AND HEAT SINK SHIPPED ASSEMBLED.

2. HEAT SINK REFERENCE PART NUMBERS:
   1829903-2 = 4.2 HIGH - PCI
   1829904-2 = 6.5 HIGH - SAN
   1829905-2 = 13.5 HIGH - NETWORKING

3. DIMENSION APPLIES PRIOR TO INSERTION OF SFP MODULE.

4. MATES WITH SFP MSA COMPLIANT TRANSCEIVERS.

5. SEE COMPONENT DRAWINGS FOR COMPONENT DIMENSIONS AND INFORMATION.

6. MATERIAL AND STRUCTURE FOR CAGE ASSEMBLY COPPER ALLOY(TOP CAGE&BOTTOM CAGE 2 PIEPCE STRUCTURE)

7. MATERIAL AND STRUCTURE FOR CAGE ASSEMBLY STAINLESS STEEL(ONE PIECE DESIGN),NICKLE OVER ALL, NON-PLATED EDGES PERMISSIBLE.

8. OBSOLETE

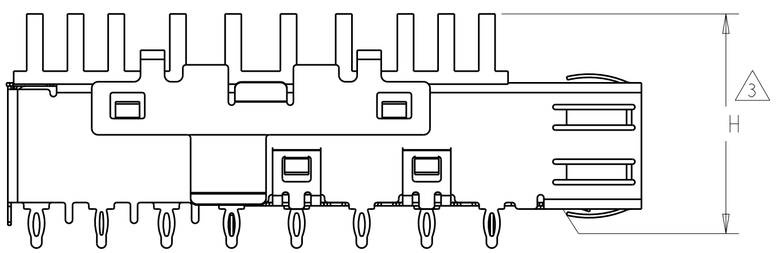

VIEW SHOWN ASSEMBLED
SCALE 3:1

	H	APPLICATION	PART NUMBER
7	22.7 MAX	NETWORKING	1367645-6
7	15.7 MAX	SAN	1367645-5
7	13.4 MAX	PCI	1367645-4
8 6	~~22.7 MAX~~	~~NETWORKING~~	~~1367645-3~~
8 6	~~15.7 MAX~~	~~SAN~~	~~1367645-2~~
8 6	~~13.4 MAX~~	~~PCI~~	~~1367645-1~~

THIS DRAWING IS A CONTROLLED DOCUMENT.

DIMENSIONS: mm

TOLERANCES UNLESS OTHERWISE SPECIFIED:
0 PLC ±-
1 PLC ±-
2 PLC ±-
3 PLC ±-
4 PLC ±-
ANGLES ±-

MATERIAL -
FINISH -
-

DWN D.E.STAHL 06FEB06
CHK F.J.BRIGHT 06FEB06
APVD F.J.BRIGHT 06FEB06
PRODUCT SPEC 108-1950
APPLICATION SPEC 114-13178
WEIGHT -

TE Connectivity

NAME KIT ASSEMBLY, PRESS FIT, DWDM SFP
-

SIZE	CAGE CODE	DRAWING NO	RESTRICTED TO
A2	00779	C-1367645	-

Customer Drawing SCALE 4:1 SHEET 1 OF 1 REV C2

1367645

1471-9 (3/13)