THIS DRAWING IS UNPUBLISHED. RELEASED FOR PUBLICATION -,- .
© COPYRIGHT - BY TYCO ELECTRONICS CORPORATION. ALL RIGHTS RESERVED.

LOC	DIST
ES	00

REVISIONS

P	LTR	DESCRIPTION	DATE	DWN	APVD
	O	RELEASED PER OS12-0317-04	16DEC04	BM	RW
	O1	REVISED PER ECO-09-024606	17DEC09	KK	AEG

1. HOUSING MATERIAL: LIQUID CRYSTAL POLYMER. COLOR: NATURAL
2. CONTACT MATERIAL: PHOSPHOR-BRONZE
3. CONTACT FINISH:(B)
   UNDERPLATE (ENTIRE CONTACT):
   0.00127 MIN NICKEL PER SAE-AMS-QQ-N-290
   ON MATING SURFACES:
   CONFORMS TO ALL TESTING SPECIFIED FOR TELCORDIA UNCONTROLLED ENVIRONMENT.
   ON LEADS:
   0.0006 MIN MATTE TIN PER ASTM B 545 OVER UNDERPLATE.
   LUBRICATION (MIN MATING SURFACES):
   SURFACE CONDITIONER AFTER PLATING.
4. PART MARKING, LOCATED APPROXIMATELY AS SHOWN.
5. OBSOLETE PARTS: OBSOLETE CIS STREAMLINING PER D.RENAUD/D.SINISI

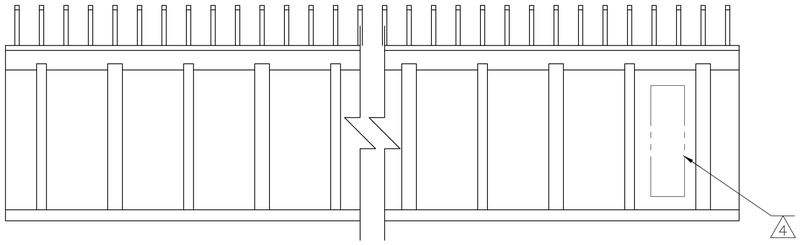

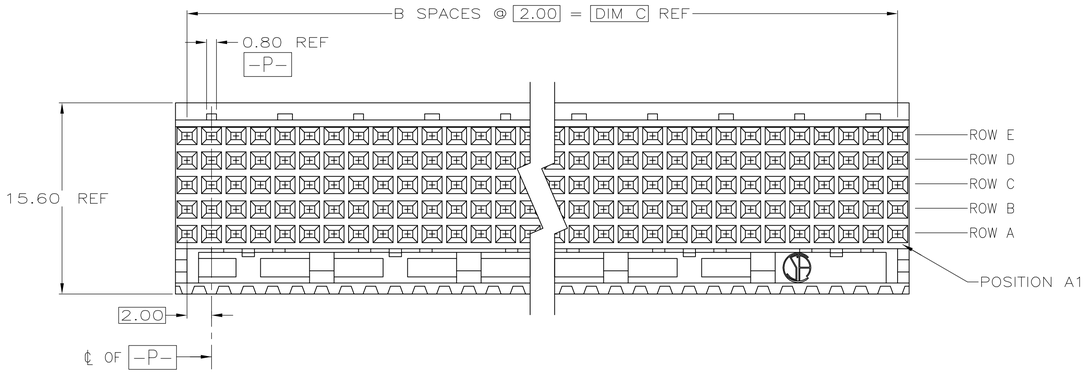

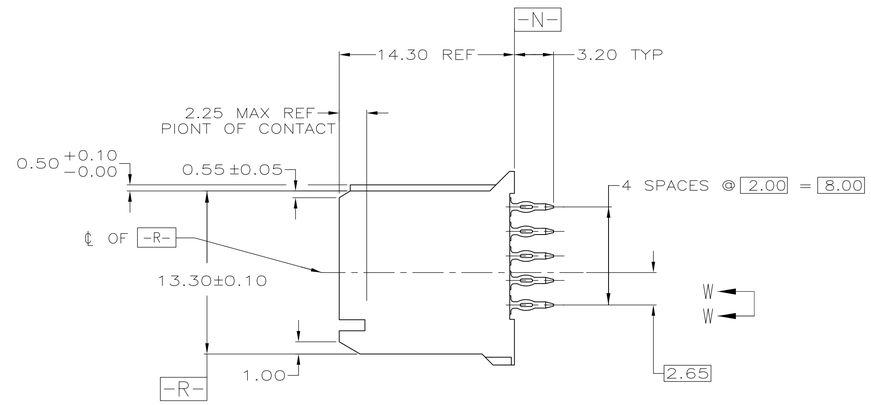

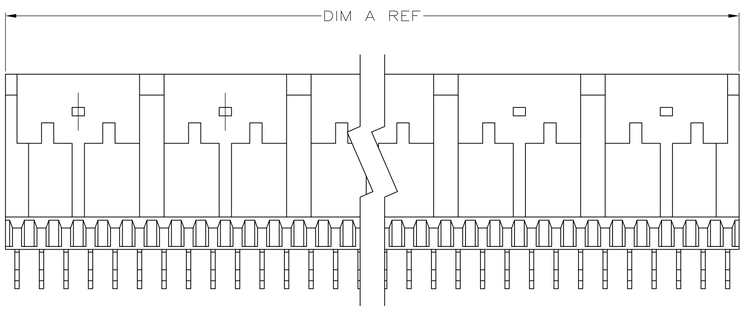

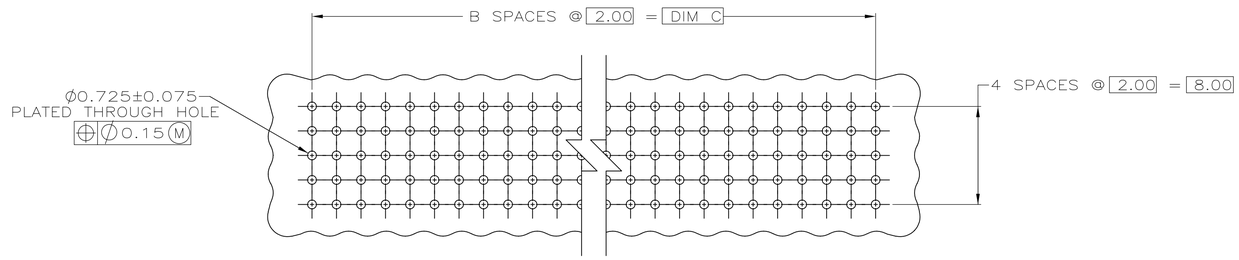

RECOMMENDED CIRCUIT PATTERN
(COMPONENT SIDE)

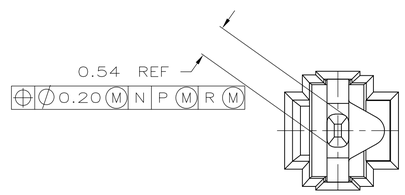

VIEW W-W
SCALE 20:1

94.00	47	95.88	240	5223668-8
82.00	41	83.88	210	~~5223668-7~~
70.00	35	71.88	180	~~5223668-6~~
58.00	29	59.88	150	~~5223668-5~~
46.00	23	47.88	120	~~5223668-4~~
34.00	17	35.88	90	~~5223668-3~~
22.00	11	23.88	60	5223668-2
10.00	5	11.88	30	5223668-1
DIM C	B	DIM A	NUMBER OF SIGNAL POSITIONS	PART NUMBER

5 OBSOLETE

THIS DRAWING IS A CONTROLLED DOCUMENT.

DIMENSIONS: mm

TOLERANCES UNLESS OTHERWISE SPECIFIED:
0 PLC ± -
1 PLC ± -
2 PLC ± 0.13
3 PLC ± -
4 PLC ± -
ANGLES ± -

MATERIAL 1 2
FINISH 3

DWN R.MCMASTER 16DEC04
CHK R.WERTZ 16DEC04
APVD R.WERTZ 16DEC04
PRODUCT SPEC —
APPLICATION SPEC —
WEIGHT —

Tyco Electronics
Tyco Electronics Corporation
Shanghai, P.R.China, 200233

NAME ASSEMBLY, RECEPTACLE, SIGNAL, VERTICAL, 5 ROW, Z-PACK 2mm FB, WITH PRESS-FIT LEADS

SIZE	CAGE CODE	DRAWING NO	RESTRICTED TO
A1	00779	C-5223668	—

CUSTOMER DRAWING | SCALE 4:1 | SHEET 1 OF 1 | REV O1