THIS DRAWING IS UNPUBLISHED. RELEASED FOR PUBLICATION - ,- .
© COPYRIGHT - By - ALL RIGHTS RESERVED.

LOC	DIST
GP	00

REVISIONS

P	LTR	DESCRIPTION	DATE	DWN	APVD
	AS	REVISED PER ECO-11-020101	12APR2012	CJV	CWR

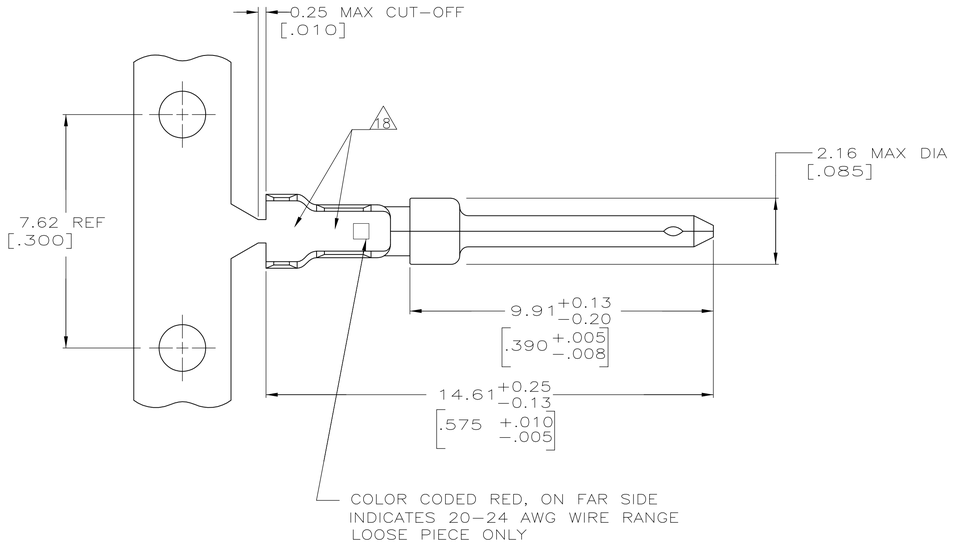

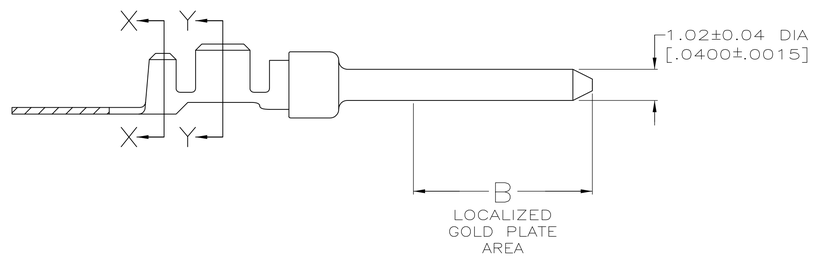

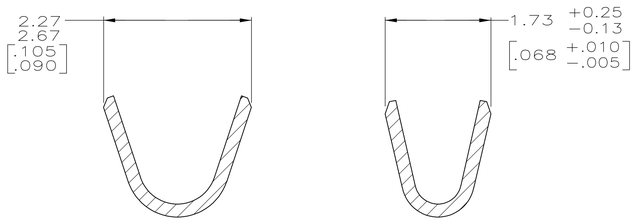

SECTION X-X
INSULATION BARREL
SCALE 20:1

SECTION Y-Y
WIRE BARREL
SCALE 20:1

1. FOR MINI-APPLICATOR AND STRIPPER CRIMPER.
2. FOR HAND TOOL USE ONLY.
3. FOR STANDARD APPLICATOR PART #566171 ONLY.
4. WIRE RANGE OF 20-24 AWG. INSULATION RANGE OF 1.27/1.52 [.050-.060].
5. GOLD PLATING MAY NOT APPEAR ON CARRIER STRIP.
6. GOLD PLATING PER MIL-G-45204.
   NICKEL PLATING PER QQ-N-290.
   TIN PLATING PER MIL-T-10727.
   COPPER PLATING PER MIL-C-14550.
7. PLATED, 1.27μm [.000050] MIN GOLD OVER
   1.27μm [.000050] MIN NICKEL.
8. GOLD PLATED IN LOCALIZED GOLD PLATE AREA AS FOLLOWS:
   0.76μm [.000030] MIN GOLD IN MATED AREA,
   GOLD FLASH ON REMAINDER OF CONTACT, ALL OVER
   1.27μm [.000050] MIN NICKEL UNDERPLATE.
   OR
   GOLD FLASH OVER
   PALLADIUM-NICKEL PLATE, 0.76μm [.000030] MIN TOTAL IN MATED AREA,
   GOLD FLASH ON REMAINDER OF CONTACT, ALL OVER
   1.27μm [.000050] MIN NICKEL UNDERPLATE.
9. PLATED WITH GOLD FLASH OVER
   0.76μm [.000030] MIN NICKEL.
10. PLATED WITH 2.54μm - 5.08μm [.000100 - .000200] TIN.
11. GOLD PLATED IN LOCALIZED GOLD PLATED AREA,
    0.76μm [.000030] GOLD IN MATED AREA,
    TIN PLATED WIRE BARRELS, OVER
    1.27μm [.000050] NICKEL.
12. PLATED WITH GOLD FLASH IN LOCALIZED GOLD PLATE AREA,
    TIN PLATED WIRE BARRELS, OVER
    0.76μm [.000030] NICKEL.
13. GOLD PLATED IN LOCALIZED GOLD PLATE AREA,
    0.38μm [.000015] GOLD IN MATED AREA,
    GOLD FLASH ON REMAINDER, OVER
    1.27μm [.000050] NICKEL.
14. AMP ITALY PART NUMBER ONLY.
15. GOLD PLATED IN LOCALIZED GOLD PLATE AREA,
    1.27μm [.000050] GOLD IN MATED AREA,
    GOLD FLASH ON REMAINDER, OVER
    1.27μm [.000050] NICKEL.
16. GOLD PLATED IN LOCALIZED GOLD PLATE AREA,
    0.03μm [.000001] GOLD IN MATED AREA,
    0.76μm [.000030] MIN TIN PLATED WIRE BARRELS, ALL OVER
    0.76μm [.000030] MIN NICKEL.
17. GOLD FLASH IN LOCALIZED GOLD PLATE AREA,
    2.54μm[.000100] MIN TIN OR TIN-LEAD PLATED WIRE BARRELS, ALL OVER
    0.76μm[.000030] MIN NICKEL.
18. COMPANY LOGO ON BOTTOM OF EITHER WIRE OR INSULATION BARRELS.

PACKAGING TYPE	B	FINISH	USE	TYPE	PART NUMBER
SUPERSEDED BY 2-66506-5 STANDARD	5.84 [.230]	17	1	STRIP	6-66506-4
OBSOLETE STANDARD	3.94 [.155]	11	3	STRIP	6-66506-3
OBSOLETE STANDARD	3.94 [.155]	16	1	STRIP	6-66506-2
SMALL PACK	3.94 [.155]	8	2	LOOSE PIECE	6-66506-1
OBSOLETE STANDARD	3.94 [.155]	15	1	STRIP	6-66506-0
OBSOLETE STANDARD	3.94 [.155]	12	2	LOOSE PIECE	5-66506-9
OBSOLETE STANDARD	3.94 [.155]	11	2	LOOSE PIECE	5-66506-7
OBSOLETE STANDARD	3.94 [.155]	12	1	STRIP	2-66506-5
OBSOLETE STANDARD	3.94 [.155]	11	1	STRIP	2-66506-4
OBSOLETE STANDARD	-	10	1	STRIP	1-66506-4
OBSOLETE STANDARD	-	7	3	STRIP	1-66506-1
STANDARD	-	9	2	LOOSE PIECE	1-66506-0
STANDARD	3.94 [.155]	8	2	LOOSE PIECE	66506-9
STANDARD	-	7	2	LOOSE PIECE	66506-8
STANDARD	-	9	1	STRIP	66506-4
STANDARD	3.94 [.155]	8	1	STRIP	66506-3
STANDARD	-	7	1	STRIP	66506-2

THIS DRAWING IS A CONTROLLED DOCUMENT.
DIMENSIONING AND TOLERANCING PER ASME Y14.5M-2009

DIMENSIONS: mm [INCHES]

TOLERANCES UNLESS OTHERWISE SPECIFIED:
0 PLC ± -
1 PLC ± -
2 PLC ± 0.13 [.005]
3 PLC ± -
4 PLC ± -
ANGLES ± -

MATERIAL: BRASS
FINISH: 6

DWN S. WELDON 9-9-86
CHK C. RICHARD 9-9-86
APVD V. KUMAR 9-10-86
PRODUCT SPEC —
APPLICATION SPEC 114-10000
WEIGHT —

TE Connectivity

NAME: PIN CONTACT, SIZE 20 DF, 20-24 AWG, AMPLIMITE

SIZE	CAGE CODE	DRAWING NO	RESTRICTED TO
A1	00779	C-66506	—

CUSTOMER DRAWING
SCALE 10:1 SHEET 1 OF 1 REV AS