Europe: +49 / 7731 8399 0 | Email: info@meder.com
USA: +1 / 508 295 0771 | Email: salesusa@meder.com
Asia: +852 / 2955 1682 | Email: salesasia@meder.com

Item No.:
**9522852504**
Item:
**LS02-1B85-PP-5000W**

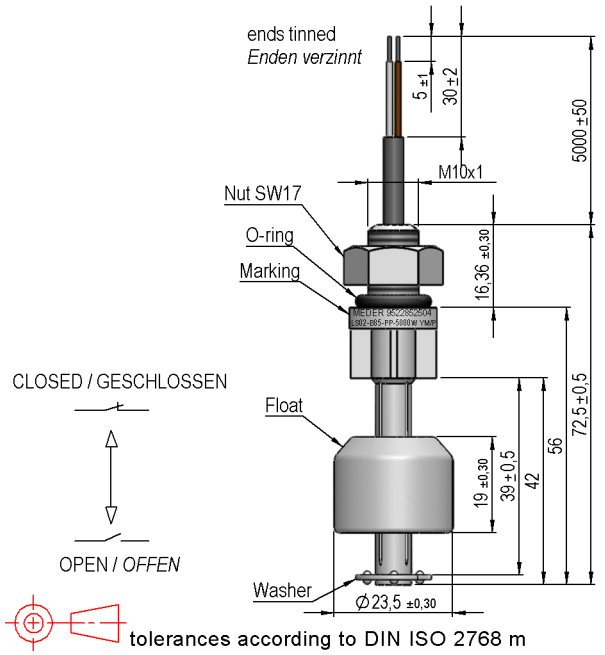

## MATERIAL
stem-polypropylene white
nut-polypropylene, white
magnet float-polypropylene white
lock washer-polypropylen white
O-ring-NBR, black
*Schaft-Polypropylen weiss*
*Mutter-Polypropylen weiss*
*Magnetschwimmer-Polypropylen weiss*
*Sicherungsring-Polypropylen, weiss*
*O-Ring- NBR, schwarz*

## CABLE
round cable LIYY 2x0,25 mm², grey
colour of wires: white and brown
*Rundkabel LIYY 2x0,25 mm², grau*
*Adernfarben: weiss und braun*

## MARKING
MEDER-label, part number
type, production code EN60062/factory code
MEDER-Logo, Art.-Nr.
Typ, Produktionscode EN60062/Fertigungsstätte

Magnetic float specific density approx. 0,7 g/cm³
Spezifisches Magnetschwimmergewicht ca. 0,7 g/cm³

| Special Product Data | Conditions | Min | Typ | Max | Unit |
|---|---|---|---|---|---|
| Contact rating | Any DC combination of V & A not to exceed their individual max.'s | | | 100 | W |
| operating voltage | DC or Peak AC | | | 350 | VDC |
| operating ampere | DC or Peak AC | | | 1 | A |
| Switching current | DC or Peak AC | | | 0,5 | A |
| Sensor-resistance | measured with 40% overdrive Sensor deactivated | | | 950 | mOhm |
| Housing material | | PP | | | |
| Case color | | white | | | |
| Sealing compound | | Polyurethan | | | |

| Environmental data | Conditions | Min | Typ | Max | Unit |
|---|---|---|---|---|---|
| Operating temperature | cable not moved | -30 | | 80 | °C |
| Operating temperature | cable moved | -5 | | 80 | °C |
| Storage temperature | | -30 | | 80 | °C |
| safety class | DIN EN 60529 | IP68, until the thread | | | |

| Cable specification | Conditions | Min | Typ | Max | Unit |
|---|---|---|---|---|---|
| Cable typ | | round cable | | | |
| Cable material | | PVC | | | |
| Cross section | | 0,25 sq-mm | | | |

| General data | Conditions | Min | Typ | Max | Unit |
|---|---|---|---|---|---|
| Mounting advice | | over 5m cable, a series resistor is recommended. | | | |
| Tightening torque | | | | 0,5 | Nm |