## PRODUCT NUMBER

57202–XXX–XXXXXLF

- RoHS COMPATIBLE SEE NOTE 7
- POLARIZATION, SEE NOTE 6
- PACKAGING, SEE NOTE 5
- NB OF POS PER ROW : 02 TO 25
- PLATING

S = 0.38µm GOLD/GXT ON CONTACT AREA
2µm MIN MATTE TIN ON TAIL

G = 0.76µm GOLD/GXT ON CONTACT AREA
2µm MIN MATTE TIN ON TAIL

F = GOLD FLASH ON CONTACT AREA
2µm MIN MATTE TIN ON TAIL

1.27µm MIN NICKEL UNDERPLATING

| STYLE | POST LENGTH ±0.2 |
|---|---|
| 51 | 2.00 |
| 52 | 4.00 |
| 53 | 3.50 |
| 54 | 2.50 |

## TOP VIEW

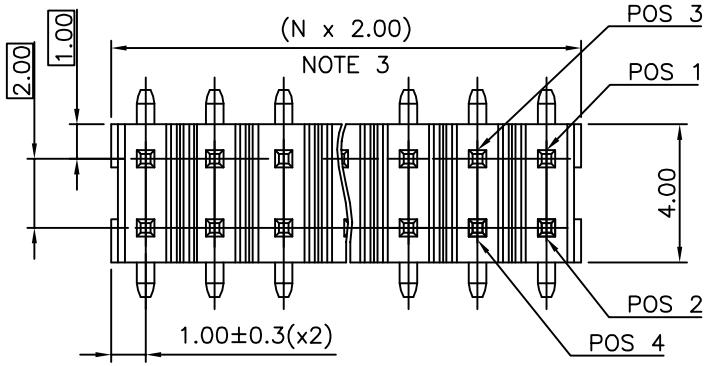


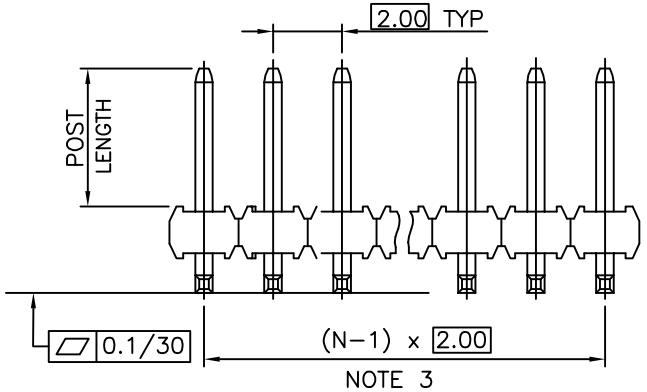


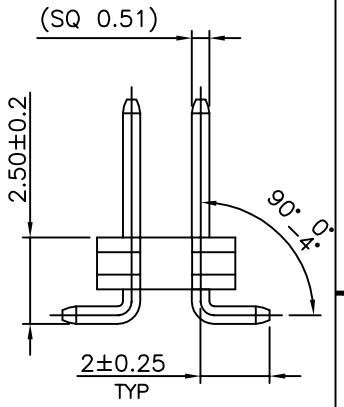


NOTES:

1. MATERIAL HOUSING: HIGH TEMP. THERMOPLASTIC
   UL 94V–0, COLOR BLACK
2. MATERIAL TERMINAL: COPPER ALLOY
3. TO DETERMINE DIMENSIONS:
   N = NUMBER OF POSITIONS PER ROW.
4. 7N MIN. PIN RETENTION IN EITHER DIRECTION.
5. PACKAGING:
   = PLASTIC BOX.
   – = PLASTIC BOX WHEN POLARISATION FEATURE APPLICABLE.
   U = TUBE AVAILABLE FROM 04 TO 25 POS PER ROW.
   A = TAPE AND REEL WITH PICK UP CAP INSTALLED IN THE CENTER OF THE PRODUCT FOR PICK AND PLACE SEE TA 884 FOR PRODUCT AVAILABILITY.
   K = TAPE AND REEL WITHOUT CAP, SEE TA884 FOR AVAILABILITY.
6. FOR POLARIZATION, SPECIFY POSITION NUMBER TO OMIT PIN.
   EXAMPLE : 03 = OMIT PIN POSITION 3, SEE TOP VIEW.
   OMIT FROM PRODUCT NUMBER IF THIS FEATURE IS NOT APPLICABLE.
7. RoHS COMPATIBLE PRODUCT SPECIFICATIONS
   a – PLATING:
   – "LF" MEANS THE PRODUCT IS LEAD–FREE, 2µm MINIMUM MATTE TIN OVER 1.27µm MINIMUM NICKEL UNDERPLATE.
   b – MANUFACTURING PROCESS COMPATIBILITY
   – THE HOUSING WILL WITHSTAND EXPOSURE TO 260°C PEAK TEMPERATURE FOR 30 SECONDES IN A CONVECTION, INFRA–RED OR VAPOR PHASE REFLOW OVEN.
   c – LABELLING:
   – MEETS PACKAGING SPECS AS PER GS–14–920
   d – LEGAL STATEMENT : SEE GS–47–0004

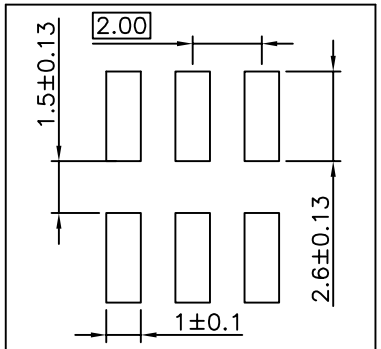


RECOMMENDED PAD LAYOUT

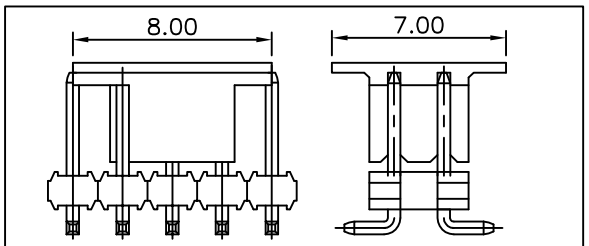


CAP DIMS FOR 2x3 POS UP TO 2x25 POS

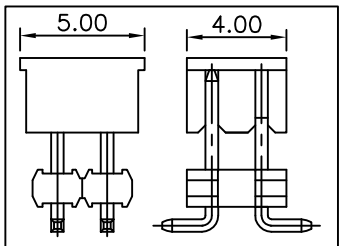


CAP DIMS FOR 2x2 POS

| ltr | ecn no | dr | date |
|---|---|---|---|
| L | F09–0087 | JCO | 09.09.04 |
| M | F11–0026 | LMU | 11.05.12 |
| N | B–19190 | LMU | 14.10.24 |
| H | F06–0210 | LMU | 06.07.04 |
| J | F06–0327 | LMU | 07.01.03 |
| K | F08–0145 | ELA | 17.04.08 |

| | | |
|---|---|---|
| dr | L.MULIN | 04.05.06 |
| engr | J.COMPAGNON | 0.4.11.25 |
| chr | | |
| appd | JM.C | 04.11.25 |

sheet index | revision sheet

mat'l. code

surface ISO 1302 ✓ | tolerance ISO 406 ISO 1101 | projection

tolerances unless otherwise specified

angles | linear .X ±0.3 | .XX ±0.13 | .XXX ±0.05

mm

scale 1:1

product family: MINITEK

title: UNSH HEADER 2.00 mm VERTICAL SMT

dwg no: 57202 | sheet 1 of 1 | size A3

type: CUSTOMER Drawing

form: A3

Copyright FCI
FCIconnect.com
PDS: Rev :N STATUS:Released Printed: Nov 13, 2014