THIS DRAWING IS UNPUBLISHED. RELEASED FOR PUBLICATION - ,- .
© COPYRIGHT - By - ALL RIGHTS RESERVED.

LOC	DIST
AA	22

REVISIONS

P	LTR	DESCRIPTION	DATE	DWN	APVD
	A1	REVISED PER ECO-11-005033	28MAR11	RK	HMR

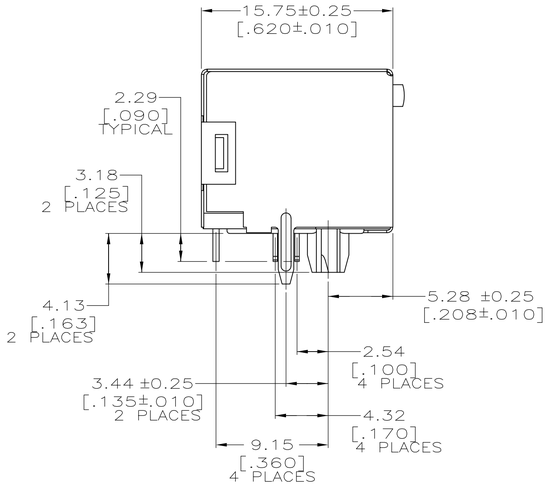

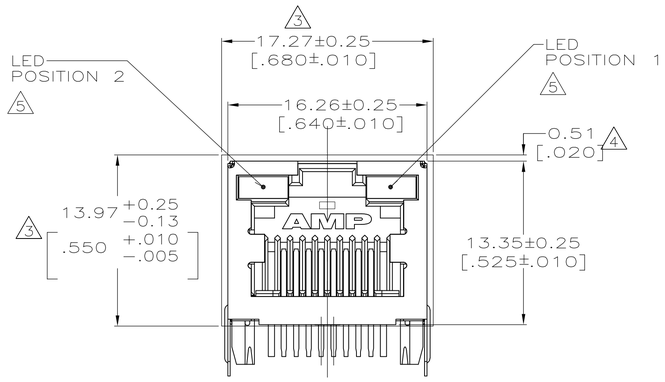

1. MATERIAL:
HOUSING – HIGH TEMPERATURE THERMOPLASTIC, BLACK, UL94V-0.
TERMINALS – 0.36 THICK PHOS BRONZE PLATED WITH 3.81 µm MIN THICK MATTE TIN IN SOLDER AREA. 1.27 µm [.000050] MINIMUM GOLD IN LOCALIZED PLATE AREA. ENTIRE TERMINAL PLATED WITH 1.27 µm MIN THICK NICKEL.
SHIELD – 0.196 THICK COPPER ZINC ALLOY PREPLATED WITH 1.27 µm MIN SATIN NICKEL WITH 2.03 µm MIN TIN POST DIPPED ON PCB GROUND TABS.
LIGHT EMITTING DIODE (LED) – DIFFUSED EPOXY LENS, 0.51 x 0.51 CARBON STEEL WIREFRAME LEADS PREPLATED WITH 8.89 µm THICK Sn/Cu OVER 2.03 µm THICK Ag OVER 1.02 µm THICK Cu OVER 3.56 µm THICK Ni OVER 1.02 µm THICK Cu UNDERPLATE

2. JACK CAVITY CONFORMS TO FCC RULES AND REGULATIIONS PART 68, SUBPART F.

3. SUGGESTED PANEL OPENING DIMENSIONS.

4. SUGGESTED CLEARANCE BETWEEN TOP OF CONNECTOR AND TOP PANEL OPENING.

5. SEE TABLE FOR COLOR OF LEDS AND NUMBER REQUIRED.

6. THIS MODULAR JACK WITH INTEGRATED LED IS NOT IR REFLOW SOLDERING PROCESS COMPATIBLE.

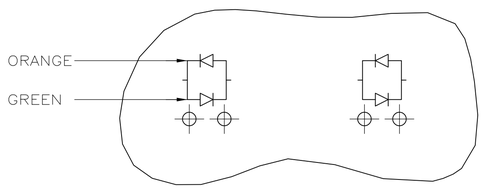

LED CURRENT DIAGRAM
1116075-7 ONLY

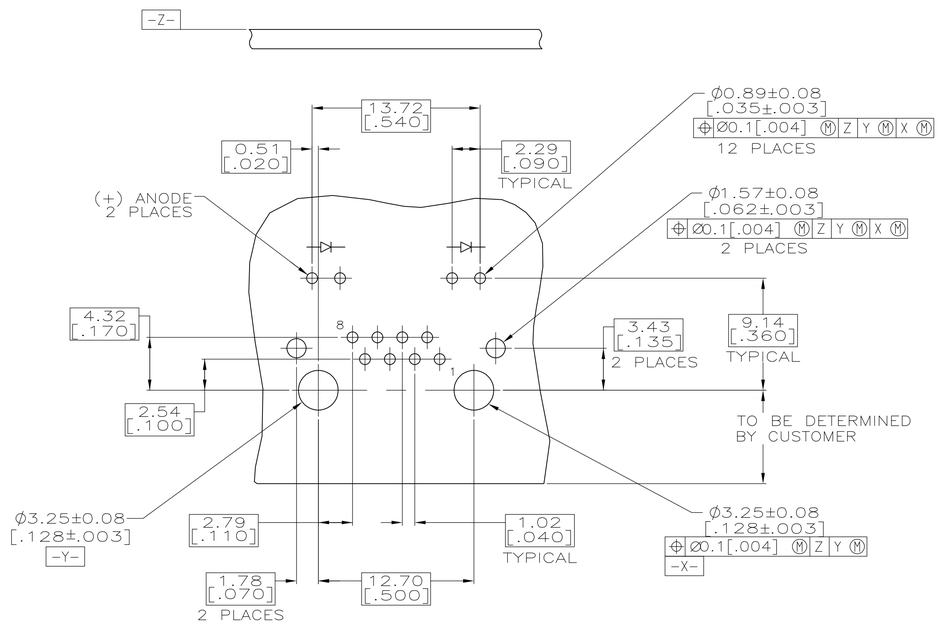

SUGGESTED PRINTED CIRCUIT BOARD LAYOUT
(COMPONENT SIDE)

ORANGE/GREEN	ORANGE/GREEN	6116075-7
YELLOW	YELLOW	6116075-6
GREEN	GREEN	6116075-5
GREEN	YELLOW	6116075-4
YELLOW	–	~~6116075-3~~
–	GREEN	~~6116075-2~~
YELLOW	GREEN	6116075-1
POSITION 2	POSITION 1	PART NUMBER
INDICATOR COLOR		

THIS DRAWING IS A CONTROLLED DOCUMENT.

DIMENSIONS: mm

TOLERANCES UNLESS OTHERWISE SPECIFIED:
0 PLC ± –
1 PLC ± –
2 PLC ± 0.25[.01]
3 PLC ± 0.13[.005]
4 PLC ± –
ANGLES ± –

MATERIAL: SEE NOTE 1
FINISH: SEE NOTE 1

DWN 30APR2005 T. SPRINKLE/L.A.MAYER
CHK 30APR2005 J.WESTMAN
APVD 30APR2005 S.FLICKINGER
PRODUCT SPEC 114-2154
APPLICATION SPEC 108-1163-4
WEIGHT –

TE Connectivity

NAME: INVERTED MODULAR JACK ASSEMBLY, 1X1, SHIELDED, LED

SIZE A1 | CAGE CODE 00779 | DRAWING NO C-6116075 | RESTRICTED TO –

CUSTOMER DRAWING | SCALE 4:1 | SHEET 1 OF 1 | REV A1

4805 (3/11)