Part Number: 52379-0640

2.54mm Pitch DIN 41612 Receptacle, Vertical, Triple Row, Center Row Void, 64 Circuits, Gold (Au) Selective 0.10µm

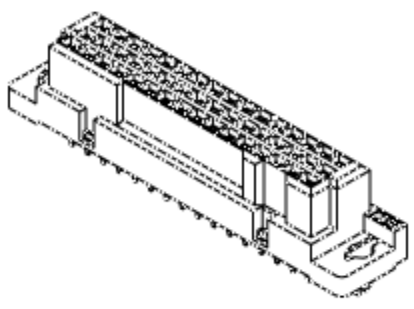

Series image - Reference only

Status:	**OBSOLETE**
Replacement:	Contact Molex
Series:	52379
Category:	Backplane Connectors

Go to **Part Detail**▼

CHECK DISTRIBUTOR INVENTORY

Add to My Parts

Email this page

Mates With Part(s):
53321, 53322, 53323

Note - Please disable browser pop-up blockers to view documents on www.molex.com

Application Tooling

FAQ

Tooling specifications and manuals are found by selecting the products below.

Crimp Height Specifications are then contained in the Application Tooling Specification document.

Previously Available Application Tooling
Check our list of old tooling that used to be available for this part

Product Environmental Compliance

EU ELV:Product not active

EU RoHS:Product not active

EU RoHS Phthalates:Product not active

China RoHS:

REACH SVHC:Product not active

Low-Halogen Status:Product not active

EU RoHS Certificate of Compliance (PDF)

Multiple Part Product Compliance Statements
EU RoHS, REACH SVHC, & Low-Halogen

Multiple Part Industry Compliance Documents

*IPC 1752A Class C
*IPC 1752A Class D
*Molex Product Compliance Declaration

Questions on Product Environmental Compliance? EmailProductCompliance@molex.com

Request Molex's CMRT from conflictminerals@molex.com

Part Detail

COLLAPSE ALL

General

Status	**Obsolete**
Category	Backplane Connectors
Series	52379
Application	Daughtercard
Component Type	PCB Receptacle
Product Name	IEC 603-2/DIN 41612
UPC	800754291248

Physical

Circuits (Loaded)	64
Circuits (maximum)	64
Durability (mating cycles max)	500
Keying to Mating Part	Yes
Material - Plating Mating	Gold
Material - Plating Termination	Tin-Lead
Number of Columns	N/A
Number of Pairs	Open Pin Field
Number of Rows	3
Orientation	Vertical
PCB Retention	None
PCB Thickness - Recommended	1.60mm
Packaging Type	Tray
Pitch - Mating Interface	2.54mm
Pitch - Termination Interface	2.54mm
Plating min - Mating	0.102µm
Plating min - Termination	1.016µm
Polarized to PCB	No
Surface Mount Compatible (SMC)	No
Temperature Range - Operating	-55°C to +105°C
Termination Interface: Style	Through Hole

Electrical

(Please review the Product Specification for specific details.)	
Current - Maximum per Contact	2.0A
Data Rate	622.0 Mbps
Voltage - Maximum	300V

Molex is a registered trademark of Molex, LLC in the United States of America and may be registered in other countries; all other trademarks listed herein belong to their respective owners.

© Copyright 2017