THIS DRAWING IS UNPUBLISHED. RELEASED FOR PUBLICATION 20
© COPYRIGHT 20 BY - ALL RIGHTS RESERVED.

LOC	DIST
FT	0

REVISIONS

P	LTR	DESCRIPTION	DATE	DWN	APVD
	E3	REVISED PER ECO-11-008211	21APR2011	HMR	CR

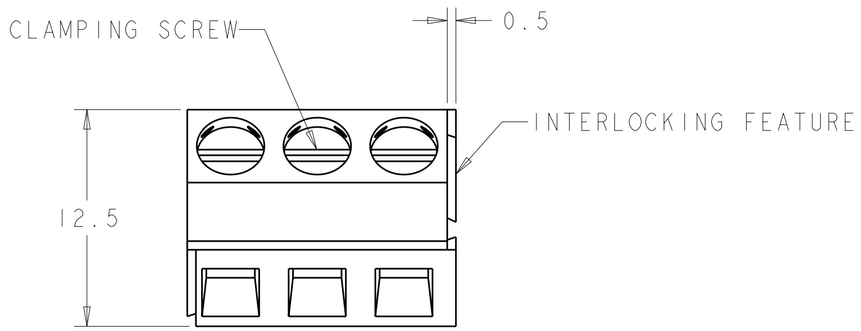

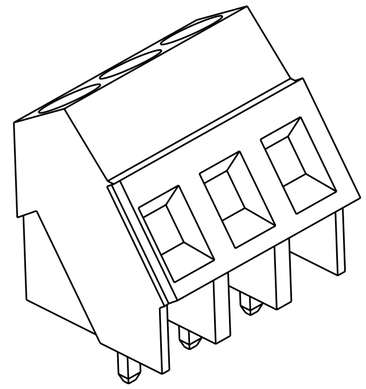

796690-3 AS SHOWN

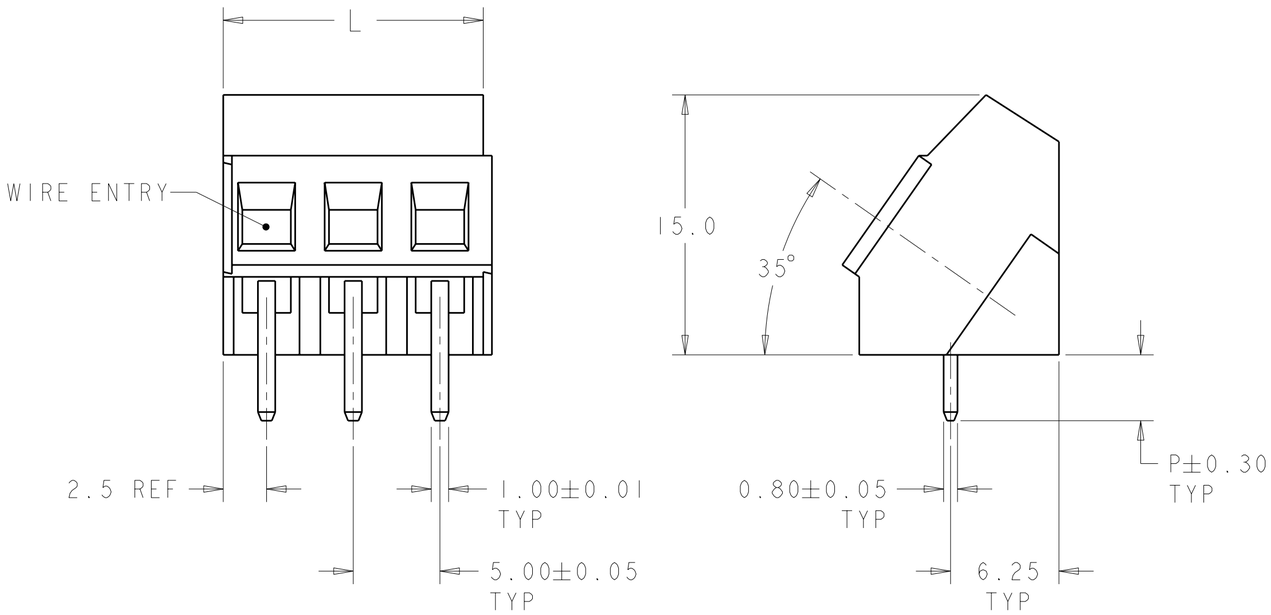

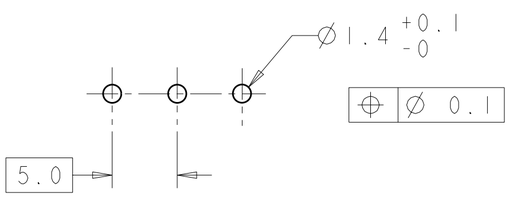

RECOMMENDED PC BOARD LAYOUT

INK COLOR	MARKING	P	L	NO OF POSN	PART NUMBER
BLACK	SEE DETAIL J	3.8	10	2	5-796690-6
BLACK	SEE DETAIL H	3.8	10	2	5-796690-5
BLACK	SEE DETAIL G	3.8	10	2	5-796690-4
-	-	6.0	15	3	5-796690-3
-	-		10	2	5-796690-2
△9	SEE DETAIL B	3.8	10	2	4-796690-2
△8	SEE DETAIL F		40	8	3-796690-8
△9	SEE DETAIL C		15	3	3-796690-3
-	-		100	20	2-796690-0
△9	SEE DETAIL C		15	3	1-796690-9
△9	SEE DETAIL B		10	2	1-796690-8
-	-	6.0	15	3	1-796690-7
-	-		10	2	1-796690-6
△8	SEE DETAIL E	3.8	25	5	1-796690-5
△8	SEE DETAIL D		20	4	1-796690-4
△8	SEE DETAIL A		10	2	1-796690-3
-	-		60	12	1-796690-2
-	-		55	11	1-796690-1
-	-		50	10	1-796690-0
-	-		45	9	796690-9
-	-		40	8	796690-8
-	-		35	7	796690-7
-	-		30	6	796690-6
-	-		25	5	796690-5
-	-		20	4	796690-4
-	-		15	3	796690-3
-	-		10	2	796690-2

THIS DRAWING IS A CONTROLLED DOCUMENT.

DIMENSIONS: mm

TOLERANCES UNLESS OTHERWISE SPECIFIED:
0 PLC ±-
1 PLC ±.3
2 PLC ±.25
3 PLC ±-
4 PLC ±-
ANGLES ±2

MATERIAL △1 -

FINISH △1 -

DWN E.ZANOLINI 14MAR2001
CHK D. BIEVENOUR 14MAR2001
APVD D. BIEVENOUR 14MAR2001

PRODUCT SPEC 108-20166
APPLICATION SPEC 114-20079
WEIGHT -

TE Connectivity

NAME TERMINAL BLOCK, PCB MOUNT ANGLED WIRE ENTRY, STACKING W/INTERLOCK, 5mm PITCH

SIZE	CAGE CODE	DRAWING NO	RESTRICTED TO
A2	00779	C-796690	-

CUSTOMER DRAWING

SCALE 3:1 SHEET 1 OF 2 REV E3

THIS DRAWING IS UNPUBLISHED. RELEASED FOR PUBLICATION 20
© COPYRIGHT 20 BY - ALL RIGHTS RESERVED.

LOC	DIST
FT	0

REVISIONS

P	LTR	DESCRIPTION	DATE	DWN	APVD
	-	SEE SHEET 1	-	-	-

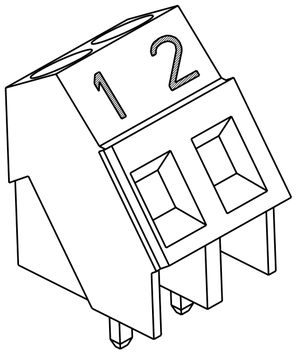

DETAIL A

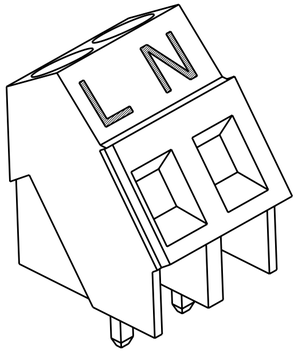

DETAIL B

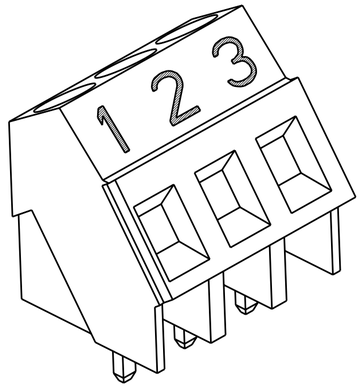

DETAIL C

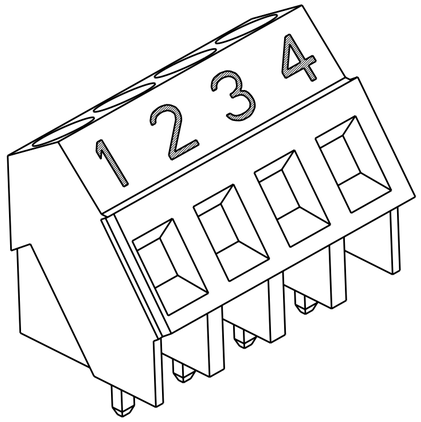

DETAIL D

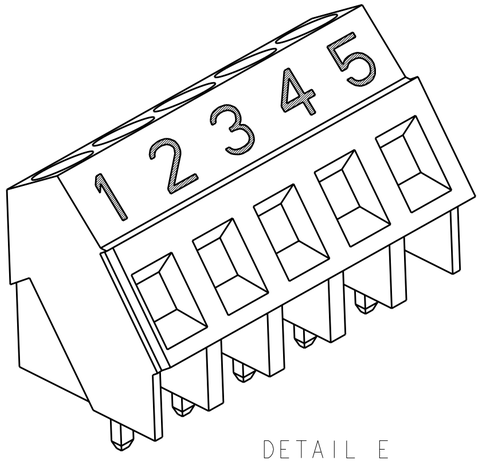

DETAIL E

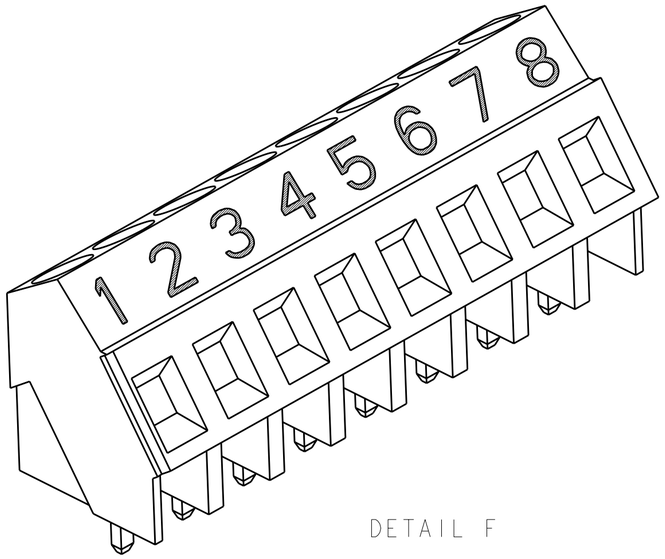

DETAIL F

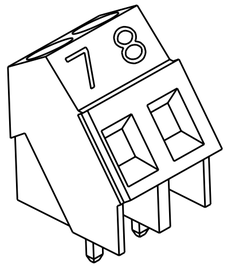

DETAIL G

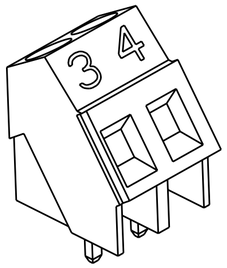

DETAIL H

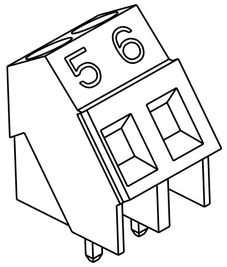

DETAIL J

1. MATERIALS AND FINISH:
   HOUSING: PA 6-6, UL 94-V0, COLOR GREEN.
   CLAMP: BRASS, NICKEL PLATED.
   TERMINAL: BRASS, TIN PLATED.
   CLAMPING SCREW: M3, BRASS, NICKEL PLATED.
2. SUITABLE FOR 1,6-2,4mm PCB THICKNESS.
3. END-TO-END STACKABLE W/INTERLOCK, WITHOUT LOSS OF CENTERLINE SPACING.
4. WIRE RANGE: 12-30 AWG.
5. RECOGNIZED UNDER THE COMPONENT PROGRAM OF UNDERWRITERS LABORATORIES INC. FILE N° E60677.
6. IMQ CERTIFICATE WITH SURVEILLANCE IN CONFORMITY WITH IEC 998-1/998-2-1.
7. NOT CUMULATIVE TOLERANCE.
8. INK MARKED WHITE, UNLESS OTHERWISE SPECIFIED. NUMERICAL SEQUENCE FROM LEFT TO RIGHT.
9. INK MARKED BLACK, UNLESS OTHERWISE SPECIFIED. NUMERICAL SEQUENCE FROM LEFT TO RIGHT.
10. BUCHANAN LOGO TO APPEAR ON HOUSING, LOCATION OPTIONAL, WHERE SPACE PERMITS.

THIS DRAWING IS A CONTROLLED DOCUMENT.

DIMENSIONS: mm

TOLERANCES UNLESS OTHERWISE SPECIFIED:
0 PLC ±-
1 PLC ±.3
2 PLC ±.25
3 PLC ±-
4 PLC ±-
ANGLES ±2

MATERIAL 1 -
FINISH 1 -

DWN 14MAR2001 E.ZANOLINI
CHK 14MAR2001 D. BIEVENOUR
APVD 14MAR2001 D. BIEVENOUR
PRODUCT SPEC 108-20166
APPLICATION SPEC 114-20079
WEIGHT -

TE Connectivity

NAME TERMINAL BLOCK, PCB MOUNT ANGLED WIRE ENTRY, STACKING W/INTERLOCK, 5mm PITCH

SIZE A2 | CAGE CODE 00779 | DRAWING NO C-796690 | RESTRICTED TO -

CUSTOMER DRAWING | SCALE 3:1 | SHEET 2 OF 2 | REV E3

1471-9 (3/11)