THIS DRAWING IS UNPUBLISHED. RELEASED FOR PUBLICATION 20
© COPYRIGHT 20 BY - ALL RIGHTS RESERVED.

REVISIONS

P	LTR	DESCRIPTION	DATE	DWN	APVD
	B2	ECR-14-010155	05AUG2014	SK	JS

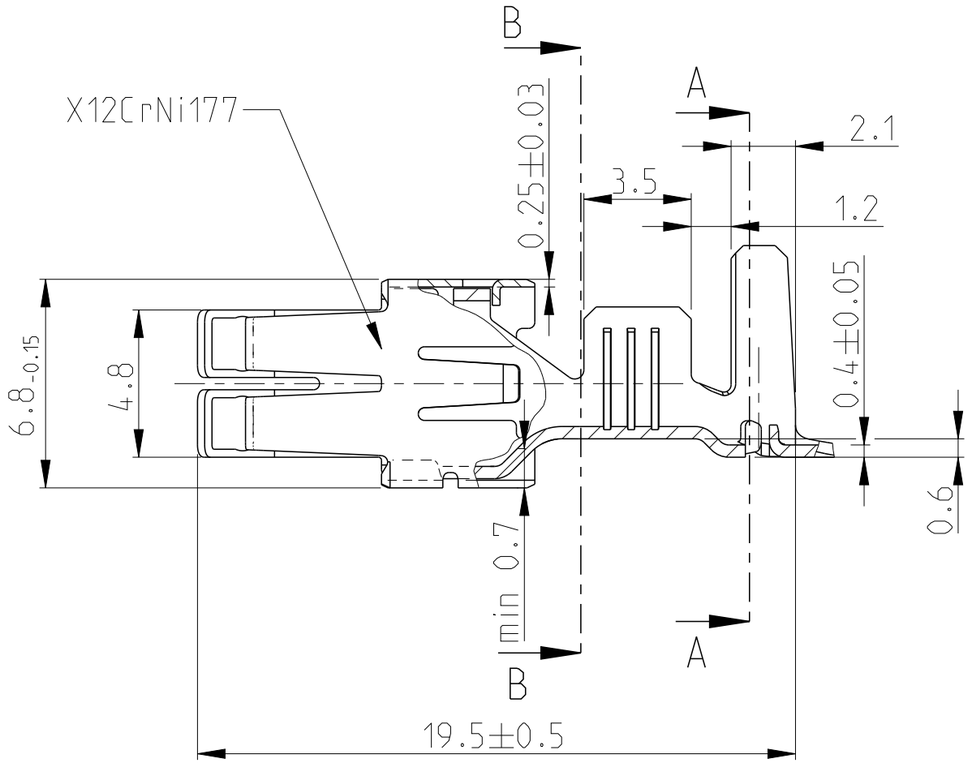

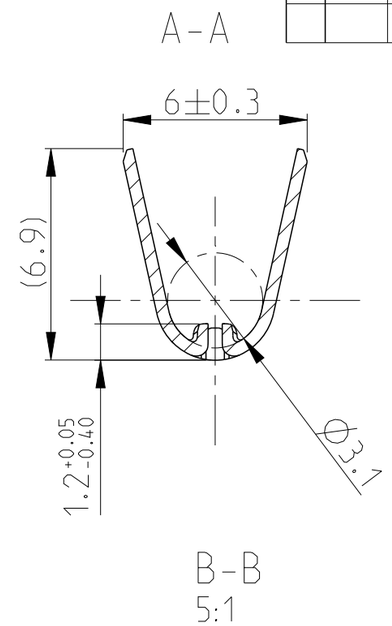

Note

1 OBSOLETE

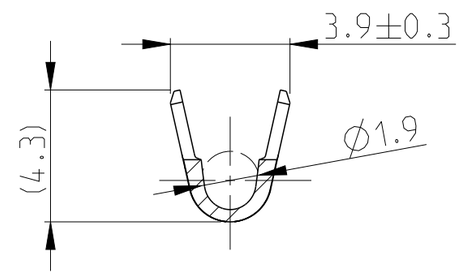

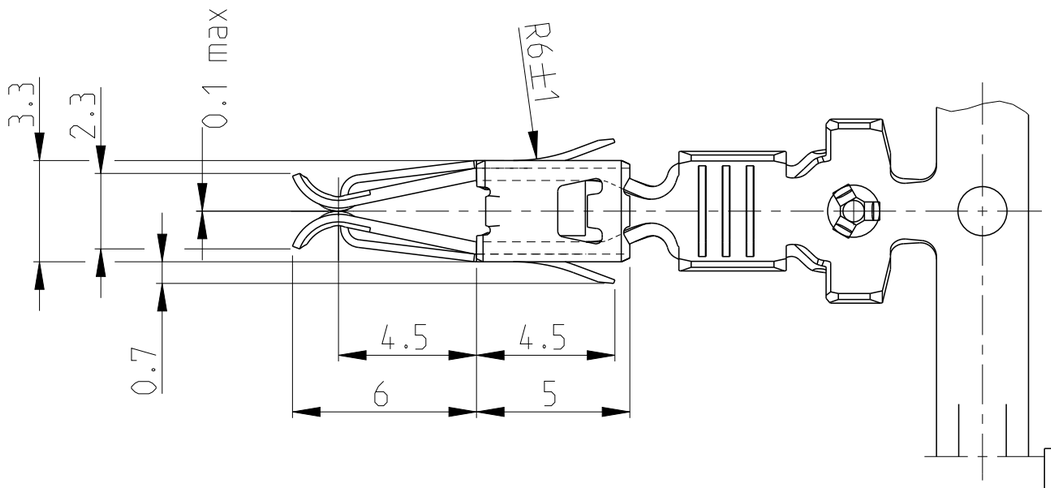

	0-964052-5	B	CuFe2	Vorversilbert
~~-~~	~~1 0-964052-2~~	~~B~~	~~CuSn4~~	~~Vorverzinnt~~
-	0-964052-1	B	CuFe2	Vorverzinnt
Bestell - Nr. Elnzelausfuahrung	Bestell - Nr.	Rev	Werkstoff	Oberflaeche / Farbe

Kontakt geeignet fuar:
Drahtgroassenbereich 1.5-3 mm²
Isolation: max. 2X∅3.4-0.4mm Uebereinader

THIS DRAWING IS A CONTROLLED DOCUMENT.

DIMENSIONS: mm

TOLERANCES UNLESS OTHERWISE SPECIFIED:
0 PLC ±-
1 PLC ±-
2 PLC ± ±0.2
3 PLC ±-
4 PLC ±-
ANGLES ±1°

MATERIAL: TBD -

FINISH: - -

DWN R.KOHL -
CHK SCHNAUBELT 20JUN1991
APVD BITSCH -
PRODUCT SPEC -
APPLICATION SPEC -
WEIGHT -

TE Connectivity

NAME: STANDARD-POWER-TIMER CONTACT
Standard Power Timer Kontakt
-

SIZE	CAGE CODE	DRAWING NO	RESTRICTED TO
A3	-	C-964052	-

Customer Drawing | SCALE 5:1 | SHEET 1 OF 1 | REV B2

1470-19 (3/13)