DO NOT SCALE	METRIC	THIRD ANGLE PROJECTION
DIMENSIONS IN mm		

B1	REVISED PER ECO-09-020689	02SEP09	KK	AEG

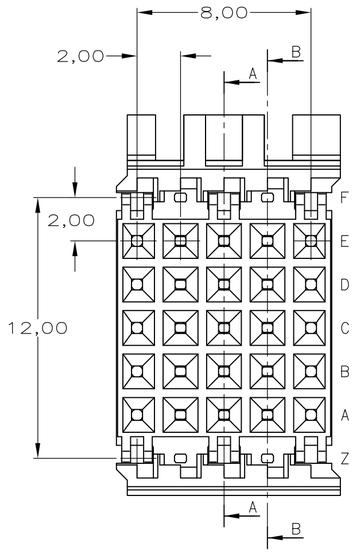

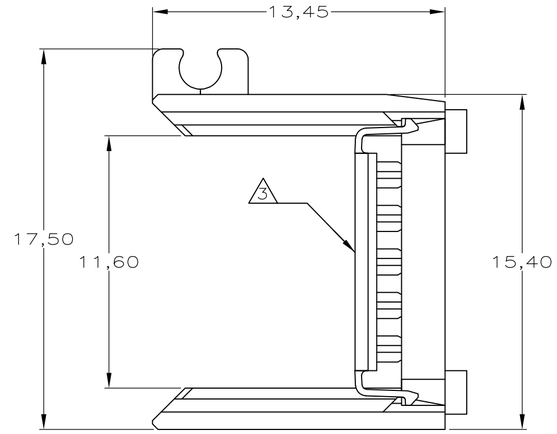

SECTION A–A

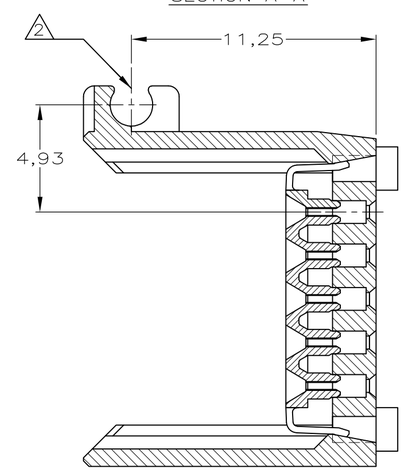

SECTION B–B

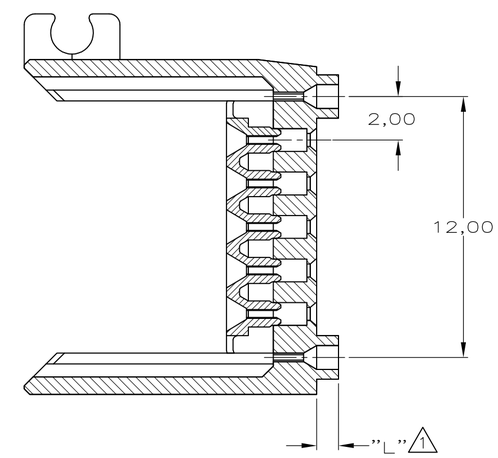

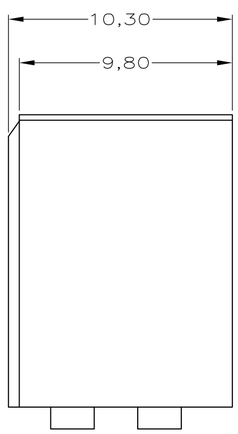

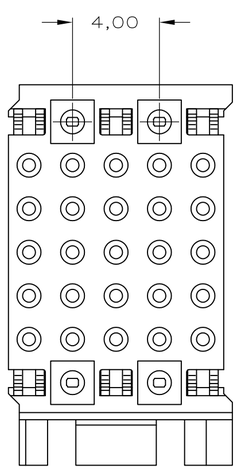

NOTES:

1. FOR LENGTH "L" AND PARTNUMBER SEE TABLE 1
2. FITS SNAP LATCH P.N. 620729-1
3. SHROUD PRE-LOADED WITH RETENTION INSERT
4. 106961-6 AS SHOWN
5. MATERIAL HOUSING ; GLASFILLED POLYESTER
   MATERIAL RET.INSERT; GLASFILLED POLYESTER
6. OBSOLETE PARTS: OBSOLETE CIS STREAMLINING PER D.RENAUD/D.SINISI

TABLE 1

PARTNUMBER	LENGTH "L"
106961-1	0,00mm
-2	0,20mm
-3	0,40mm
-4	0,60mm
-5	0,80mm
-6	1,00mm

6 OBSOLETE

CUSTOMER DRAWING

FOR REFERENCE ONLY

WILL NOT BE UPDATED

–	5	1
FINISH	MATERIAL	PARTNUMBER

AMP-HOLLAND B.V.
's-Hertogenbosch, The Netherlands.

THIS DRAWING IS UNPUBLISHED ~~RELEASED FOR PUBLICATION~~ – ,19–

© COPYRIGHT 19 – BY AMP-HOLLAND B.V.
ALL INTERNATIONAL RIGHTS RESERVED.
AMP PRODUCTS MAY BE COVERED BY U.S. AND FOREIGN PATENTS AND/OR PATENTS PENDING.

DR.	DATE	WIRE RANGE	NAME	REV.DATE D M Y
W. VAN DER HEIJDEN	01-03-94	–	Z-PACK 2mm HM 5X7 POS. MALE SHROUD FOR CABLE CONNECTOR	01 06 95
CHK. J. BROEKSTEEG	DATE	INSUL.RANGE –		
APP. –	DATE	SIZE A2	SHEET 1 OF 1	DWG. No. C-106961
				REV.LTR. B1

11 10 9 8 7 6 5 4 3 2 1