THIS DRAWING IS UNPUBLISHED. RELEASED FOR PUBLICATION -
© COPYRIGHT - BY TYCO ELECTRONICS CORPORATION. ALL RIGHTS RESERVED.

LOC	DIST
J	-

REVISIONS 変更

P	LTR	DESCRIPTION	ECN	DATE	DWN	APVD
	0	RELEASED	FJ00-2455-01	24OCT01	ET	KA
	01	REVISED	FJ00-2423-01	19DEC01	ET	KA

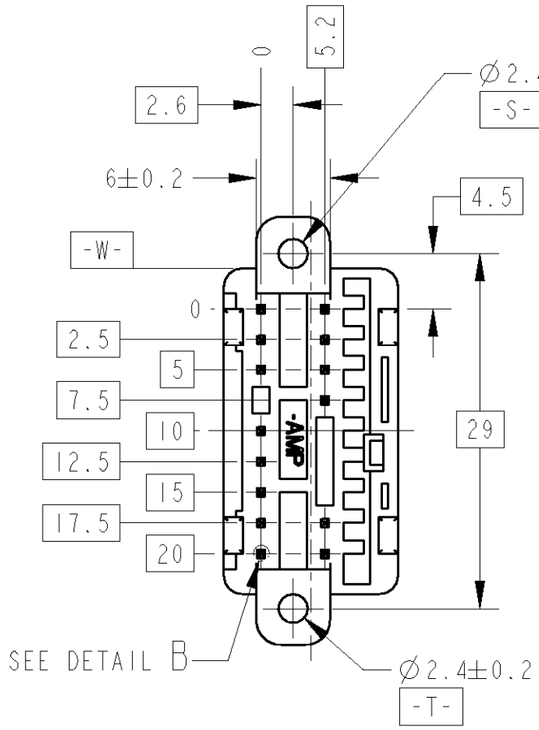

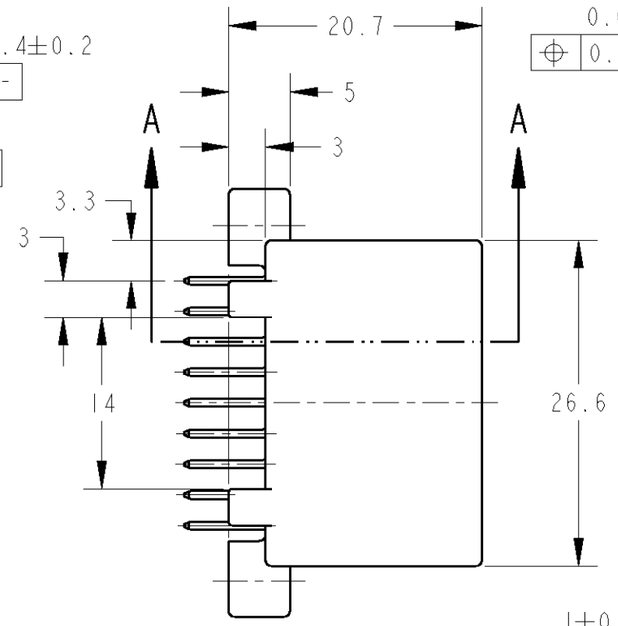

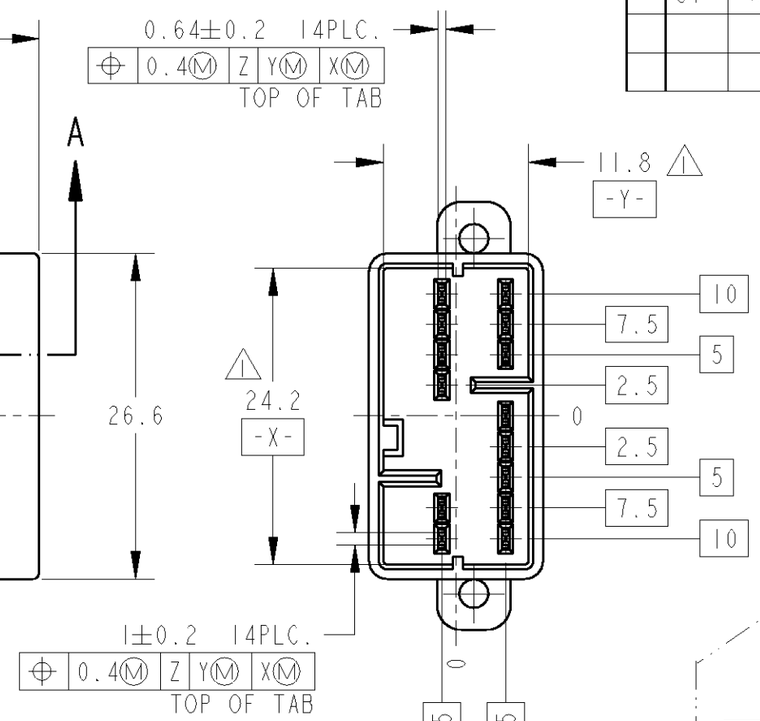

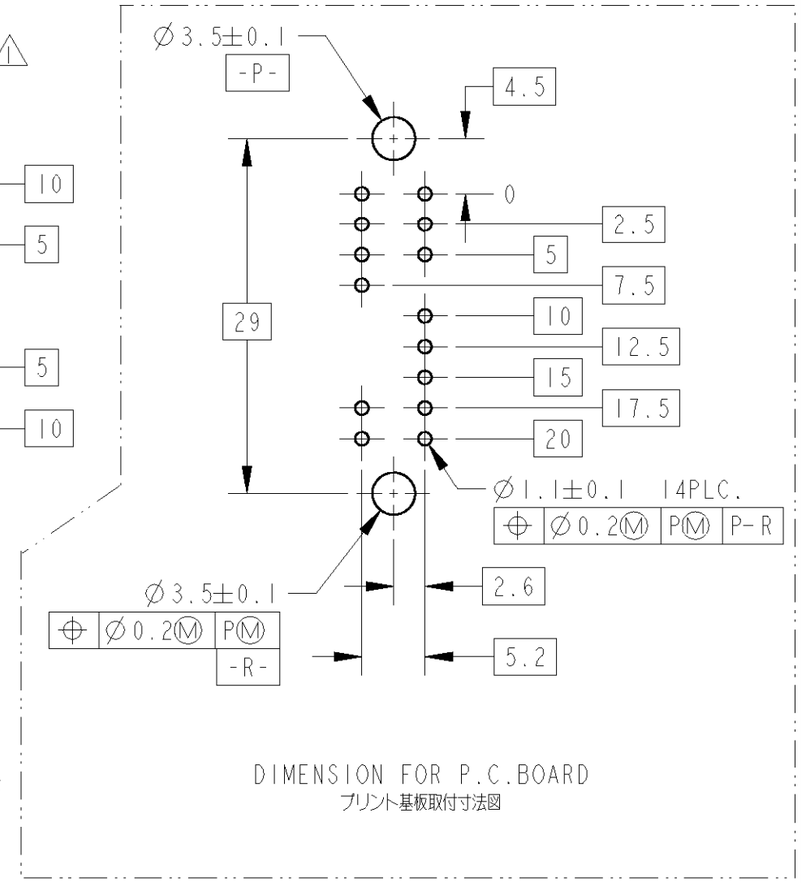

DIMENSION FOR P.C.BOARD
プリント基板取付寸法図

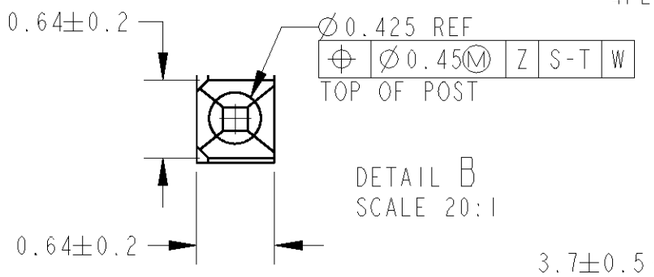

DETAIL B
SCALE 20:1

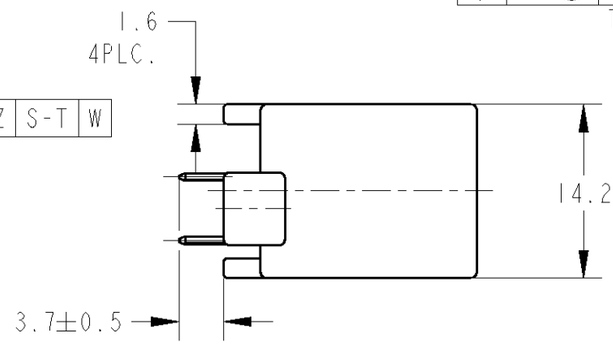

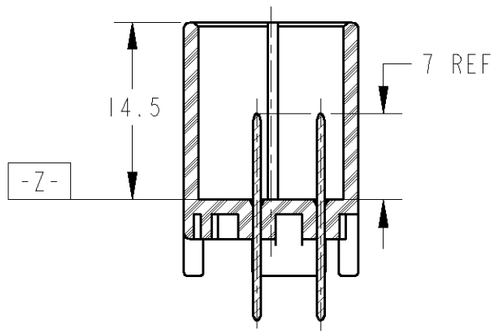

A-A

⚠1 -Z- 面から2mmの範囲で測定
2. 推奨取付けネジ; JIS B1115, B1122タッピングネジ
ナベ2種呼び径3, 長さ6mm以上(締付けトルク; 0.392N.m以下)
3. 嵌合相手ハウジング; PN 917531
4. 取り扱い説明書; 411-5883
5. 梱包形態 ; 内装 ー 紙チューブ
外装 ー ダンボール

⚠1 MUST BE KEPT BETWEEN -Z- AND 2.
2. RECOMMENDED MOUNTING SCREW 3mm DIA, 6mm LENGTH MAX.
PAN HEAD, CLASS 2 TAPPING SCREW SPRCIFIED
IN JIS B1115, B1122.
(TIGHTENING TORQUE; 0.392N.m MAX)
3. MATING PLUG HOUSING ; PN 917531
4. INSTRACTION SHEET; 411-5883
5. PACKING STYLE ; INNER - PAPER TUBE
OUTER - PAPER BOX

PRE-TINNED 錫メッキ	NATURAL	1565258-1
FINISH OF CONTACT コンタクト仕上げ	COLOR 色	PART NUMBER 型番

WIRE RANGE 适合電線断面積: 0.3~0.5 mm²
INSULATION DIA 被覆外径: 1.1~2.0 mm

THIS DRAWING IS A CONTROLLED DOCUMENT FOR TYCO ELECTRONICS CORPORATION. IT IS SUBJECT TO CHANGE AND THE CONTROLLING ENGINEERING ORGANIZATION SHOULD BE CONTACTED FOR THE LATEST REVISION.

DIMENSIONS: 単位: 耗 mm

TOLERANCES UNLESS OTHERWISE SPECIFIED: ±0.3
0 PLC ±-
1 PLC ±0.1
2 PLC ±0.01
3 PLC ±0.001
4 PLC ±-
ANGLES ±3°00′

MATERIAL 材料: PBT
FINISH 仕上: SEE TABLE

DWN E.TAKIZAWA 24OCT01
CHK K.ASAI 24OCT01
APVD K.ASAI 24OCT01
PRODUCT SPEC 製品規格: 108-5470
APPLICATION SPEC 取付適用規格: -
WEIGHT: 5.3 g

AMP Tyco Electronics AMP K.K. Kawasaki, Japan

NAME 名称: 040MLC CONNECTOR 14POSITIONS CAP ASSEMBLY (VERTICAL TYPE)

SIZE A3 | CAGE CODE 00779 | DRAWING NO 番号 C-1565258 | RESTRICTED TO -

CUSTOMER DRAWING | SCALE 尺度 2:1 | SHEET 1 OF 1 | REV 01

AMP 1470-19 REV 31MAR2000

Pro/ENGINEER DRAWING