THIS DRAWING IS UNPUBLISHED. RELEASED FOR PUBLICATION OCT ,2000.
© COPYRIGHT 2000 By – ALL RIGHTS RESERVED.

LOC	DIST
J	

REVISIONS

P	LTR	DESCRIPTION	DATE	DWN	APVD
	G1	PER ECO-13-016951	15AUG2014	BL	JY

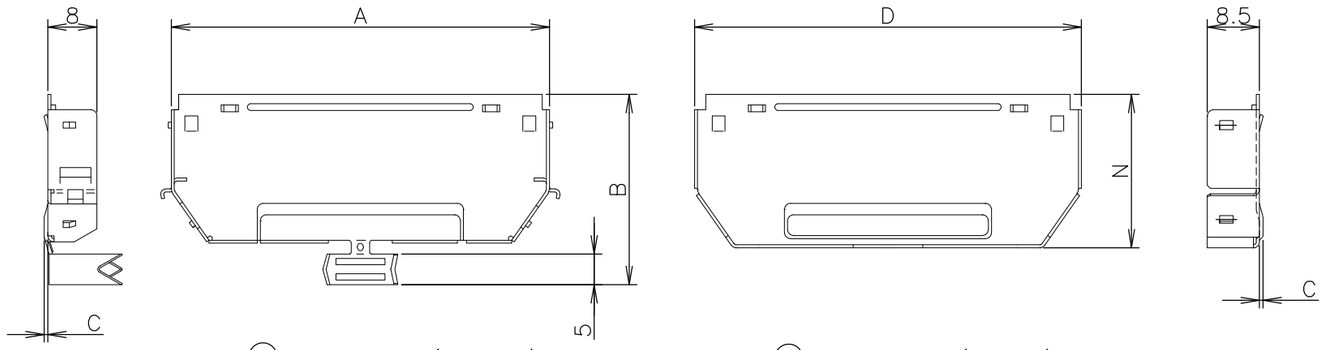

① REAR SHELL (BOTTOM)

② REAR SHELL (UPPER)

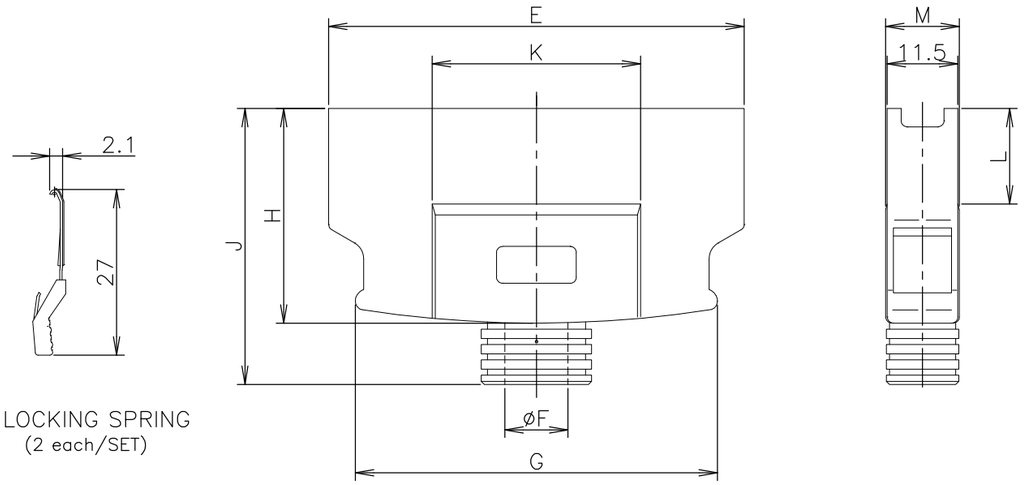

③ LOCKING SPRING
(2 each/SET)

④ ENCLOSURE

ITEM	MATERIAL	FINISH
①②	STEEL t=0.5	NICKEL PL. OVER COPPER PL.
③	STAINLESS STEEL THERMOPLASTIC UL94V-0	
④	G.F THERMOPLASTIC UL94V-0	COLOR:SEE ANOTHER TABLE

RECOMMENDED CABLE DIA	COLOR	POSN	P/NO.
OBSOLETE	↑	~~80~~	~~3-176793-0~~
OBSOLETE		~~100~~	~~2-↑-9~~
OBSOLETE		~~68~~	~~2-↑-8~~
OBSOLETE		~~50~~	~~2-↑-7~~
6.4~7.9		36	2-↑-5
5.9~6.9		26	2-↑-4
5.4~6.5		20	2-↑-2
OBSOLETE	~~BLACK~~	~~14~~	~~2-176793-1~~
OBSOLETE	↑	~~80~~	~~1-176793-0~~
9.9~11.0		100	↑-9
8.1~9.6		68	↑-8
OBSOLETE		~~50~~	~~↑-7~~
OBSOLETE		~~36~~	~~↑-5~~
5.9~6.9		26	↑-4
OBSOLETE		~~20~~	~~↑-2~~
OBSOLETE	~~BEIGE WHITE~~	~~14~~	~~176793-1~~

GENERAL TOLERANCE

10 ≧ : ±0.2
30 ≧ > 10: ±0.25
100 ≧ > 30: ±0.3
ANGLES: ±3°

1- -0; AS SHOWN

POSN	A	B	C	D	E	F	G	H	J	K	L	M	N
80	61.80	31	0.6	63.10	67.75	10.3	59.05	35	45	34	15.6	11.8	25
100	74.50	33	1.3	75.80	80.45	11.2	71.75	37	47	38	12.5	13.5	27
68	54.18	28	0.6	55.48	60.13	9.8	51.43	32	42	30	14.3	12.0	22
50	42.75	28	*	44.05	48.70	8.7	40.00	32	42	13	*	11.5	22
36	33.86	28	*	35.16	39.81	8.1	31.11	32	42	13	*	11.5	22
26	27.51	28	*	28.81	33.46	7.1	24.76	32	42	13	*	11.5	22
20	23.70	28	*	25.00	29.65	6.7	20.95	32	42	13	*	11.5	22
14	19.89	28	*	21.19	25.84	6.3	17.14	32	42	13	*	11.5	22

THIS DRAWING IS A CONTROLLED DOCUMENT.

DIMENSIONS: mm

TOLERANCES UNLESS OTHERWISE SPECIFIED:
0 PLC ±
1 PLC ±
2 PLC ±
3 PLC ±
4 PLC ±
ANGLES ±

MATERIAL: SEE TABLE

FINISH: SEE TABLE

DWN	T.KAWAMAE	10OCT00
CHK	H.MURAMATSU	11OCT00
APVD	H.MURAMATSU	11OCT00
PRODUCT SPEC	108-5288	
APPLICATION SPEC	114-5166	
WEIGHT		

TE Connectivity

NAME: SHIELD CASE KIT
WITHOUT LOGO
CHAMP.050 SERIES II STD-TYPE

SIZE	CAGE CODE	DRAWING NO	RESTRICTED TO
A3	00779	C-176793	

CUSTOMER DRAWING

SCALE	SHEET	REV
1:1	1 OF 1	G1