DESCRIPTION: 976 SERIES

BACKSHELL KIT INCLUDES:
- (2) BACKSHELL HALVES
- (2) 4-40 MATING SCREWS
- (2) HOUSING SCREWS
- (2) HOUSING NUTS

976-XXX-XXXRXX1

SERIES

POSITIONS
- 009
- 015
- 025
- 037

MATERIAL
- 010 = PLASTIC
- 020 = METALIZED PLASTIC

COLOR:
- 03 = GREY
- 12 = NICKEL OVER COPPER

PUT-UPS
- 1 = KIT

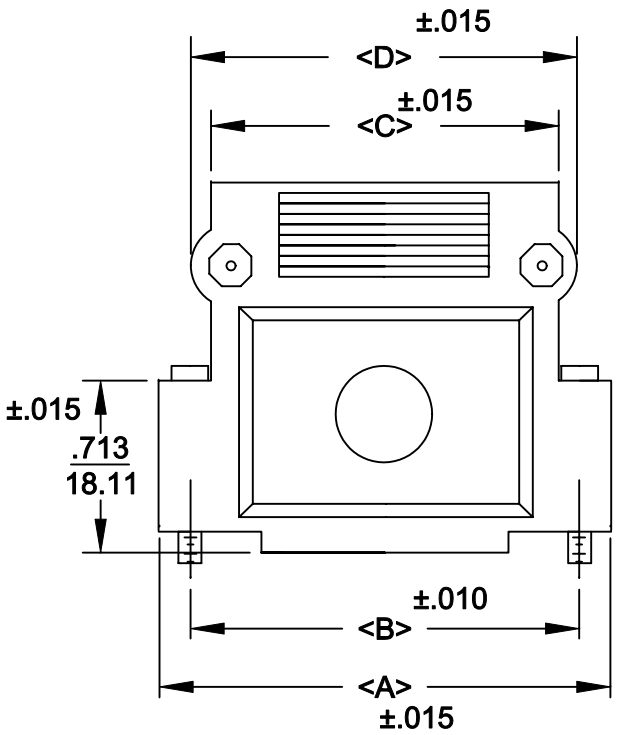

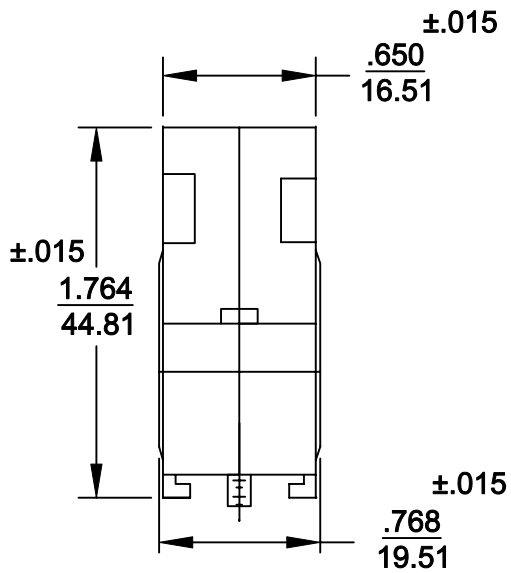

POS.	A	B	C	D
9	1.319	.984	.758	.946
	33.50	24.99	19.25	24.03
15	1.622	1.312	1.102	1.289
	41.20	33.32	27.99	32.74
25	2.157	1.852	1.642	1.874
	54.79	47.04	41.71	47.60
37	2.815	2.500	2.283	2.470
	71.50	63.50	57.99	62.74

METALIZED PLASTIC:
MATERIALS: ABS HIGH TEMPERATURE PLASTIC 94HB
PLATING: CHROME - ELECTROPLATED
PLASTIC:
MATERIALS: ABS HIGH TEMPERATURE PLASTIC 94HB - GREY

RoHS COMPLIANT

THESE DRAWINGS AND SPECIFICATIONS ARE THE PROPERTY OF NorComp AND SHALL NOT BE REPRODUCED, COPIED OR USED AS THE BASIS FOR THE MANUFACTURE OR SALE OF APPARATUS WITHOUT WRITTEN PERMISSION.

NorComp

DRAWN: PAM JENKINS	DATE: 7-28-05
CHECKED:	DATE:
SCALE	SHEET OF / REV 1
DWG NO. 976-XXX-0X0RXX1	