THIS DRAWING IS UNPUBLISHED. RELEASED FOR PUBLICATION -,- .
© COPYRIGHT - BY TYCO ELECTRONICS CORPORATION. ALL RIGHTS RESERVED.

LOC	DIST
AD	39

REVISIONS

P	LTR	DESCRIPTION	DATE	DWN	APVD
	J1	ECO-05-7481	14FEB06	MB	JO
	J2	REVISED PER ECO-10-000443	12JAN09	KK	AEG

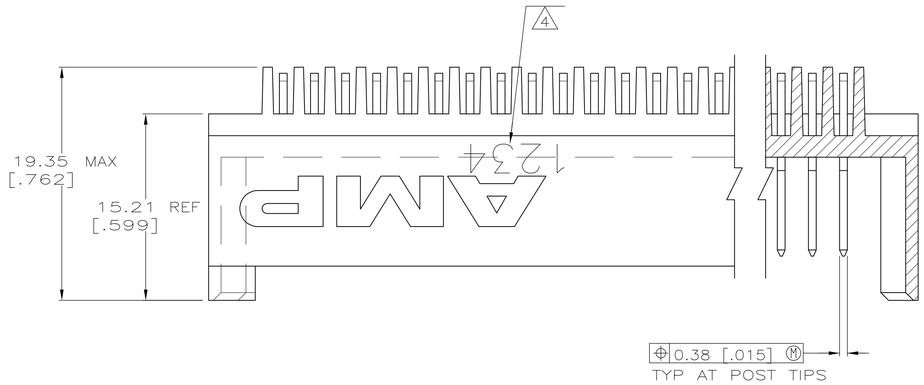

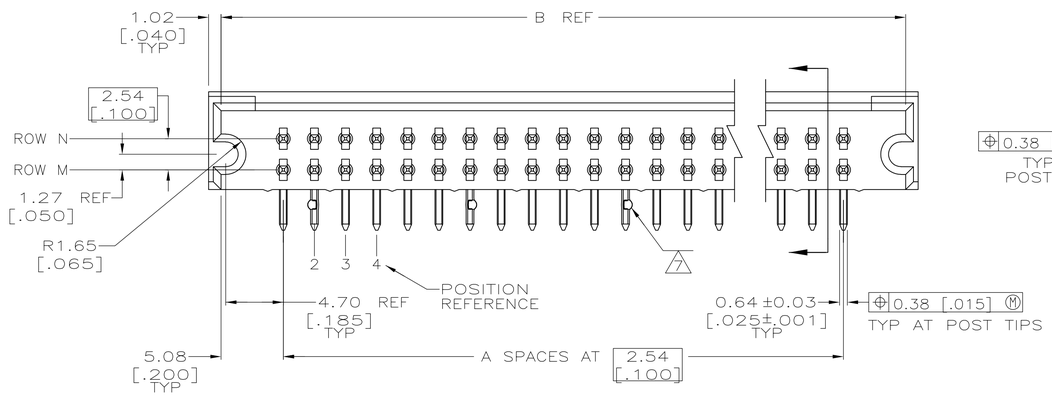

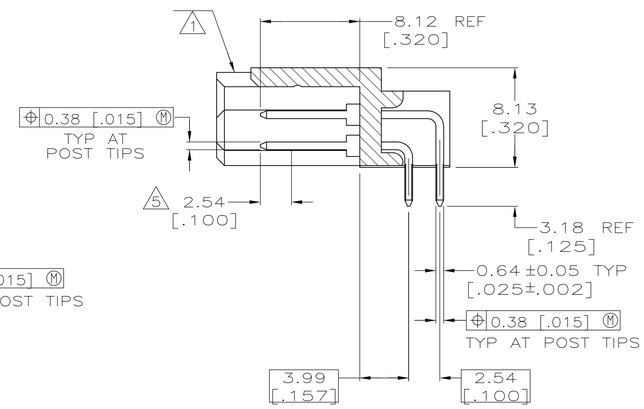

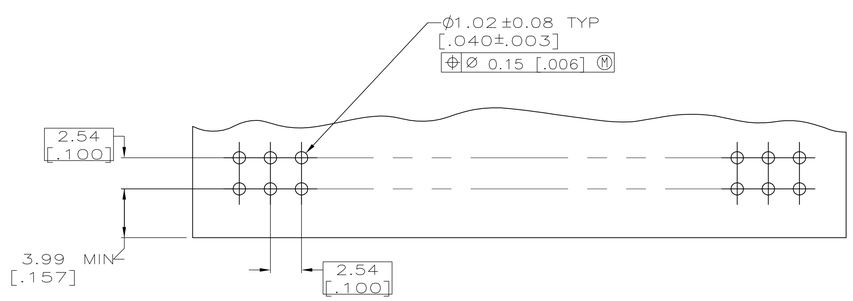

RECOMMENDED P.C. BOARD HOLE LAYOUT

1. HOUSING: FLAME RETARDANT THERMOPLASTIC; COLOR: BLACK.
2. POST: PHOSPHOR BRONZE
3. POST FINISH: 0.00076 [.000030] GOLD ON CONTACT AREA, 0.00254 [.000100] MIN BRIGHT TIN-LEAD ON SOLDER LEADS, ALL OVER 0.00127 [.000050] NICKEL.
4. RECESSED DATE CODE.
5. POINT OF MEASUREMENT FOR GOLD PLATING THICKNESS.
6. CSA LOGO RECESS STAMPED ON HOUSING.
7. BOARD RETENTION FEATURE WHERE INDICATED.
8. POST FINISH: 0.00076 [.000030] GOLD ON CONTACT AREA, 0.00254 [.000100] MIN MATTE TIN ON SOLDER LEADS, ALL OVER 0.00127 [.000050] NICKEL.
9. ROHS 2002/95/EC COMPLIANT
10. OBSOLETE PARTS: OBSOLETE CIS STREAMLINING PER D.RENAUD/D.SINISI

OBSOLETE		2, 22, 43, 64	2, 22, 43, 64	172.72 [6.800]	64	130	9 ~~6-534245-3~~
		2, 18, 37, 54	2, 18, 37, 54	147.32 [5.800]	54	110	9 ~~6-534245-2~~
		2, 17, 33, 49	2, 17, 33, 49	134.62 [5.300]	49	100	9 ~~6-534245-1~~
		2, 20, 39	2, 20, 39	109.22 [4.300]	39	80	9 ~~6-534245-0~~
		2, 18, 34	2, 18, 34	96.52 [3.800]	34	70	9 ~~5-534245-9~~
		4, 9, 14	4, 9, 14	53.34 [2.100]	17	36	9 5-534245-8
OBSOLETE	8	5, 6, 7	5, 6, 7	38.10 [1.500]	11	24	9 ~~5-534245-7~~
		4, 5, 6	4, 5, 6	33.02 [1.300]	9	20	9 5-534245-6
OBSOLETE		2, 3, 4	2, 3, 4	22.86 [.900]	5	12	9 ~~5-534245-5~~
		3, 4, 5	3, 4, 5	27.94 [1.100]	7	16	9 5-534245-4
OBSOLETE		2, 20, 40, 59	2, 20, 40, 59	160.02 [6.300]	59	120	9 ~~5-534245-3~~
		3, 8, 13	3, 8, 13	45.72 [1.800]	14	30	9 5-534245-2
OBSOLETE		8, 13, 18	8, 13, 18	71.12 [2.800]	24	50	9 ~~5-534245-1~~
		2, 22, 43, 64	2, 22, 43, 64	172.72 [6.800]	64	130	~~1-534245-3~~
10 OBSOLETE		2, 18, 37, 54	2, 18, 37, 54	147.32 [5.800]	54	110	~~1-534245-2~~
		2, 17, 33, 49	2, 17, 33, 49	134.62 [5.300]	49	100	~~1-534245-1~~
		2, 20, 39	2, 20, 39	109.22 [4.300]	39	80	~~1-534245-0~~
OBSOLETE		2, 18, 34	2, 18, 34	96.52 [3.800]	34	70	534245-9
10 SUPERSEDED BY 5-534245-8		4, 9, 14	4, 9, 14	53.34 [2.100]	17	36	~~534245-8~~
10 OBSOLETE	3	5, 6, 7	5, 6, 7	38.10 [1.500]	11	24	~~534245-7~~
		4, 5, 6	4, 5, 6	33.02 [1.300]	9	20	534245-6
10 OBSOLETE		2, 3, 4	2, 3, 4	22.86 [.900]	5	12	~~534245-5~~
		3, 4, 5	3, 4, 5	27.94 [1.100]	7	16	534245-4
10 OBSOLETE		2, 20, 40, 59	2, 20, 40, 59	160.02 [6.300]	59	120	~~534245-3~~
		3, 8, 13	3, 8, 13	45.72 [1.800]	14	30	534245-2
		8, 13, 18	8, 13, 18	71.12 [2.800]	24	50	534245-1
FINISH		ROW M	ROW N	B	A	NO OF POSN	PART NUMBER
		BOARD RETENTION LOCATION 7					

THIS DRAWING IS A CONTROLLED DOCUMENT.

DIMENSIONS: INCHES

TOLERANCES UNLESS OTHERWISE SPECIFIED:
0 PLC ± –
1 PLC ± –
2 PLC ± 0.13 [.005]
3 PLC ± –
4 PLC ± –
ANGLES ± –

MATERIAL 1 2

FINISH SEE TABLE

DWN K.L.CLOUSER/UTA 2/15/91
CHK DOUG SARVER 3/3/91
APVD –
PRODUCT SPEC –
APPLICATION SPEC –
WEIGHT –

CUSTOMER DRAWING

Tyco Electronics
Tyco Electronics Corporation
Harrisburg, PA 17105-3608

NAME
HEADER ASSY, MOD II, DOUBLE ROW, 2.54 X 2.54 [.100 X .100] 0.64 [.025] SQ POST, RIGHT ANGLE, W/ GUIDE PINS & RETENTION FEATURE

SIZE	CAGE CODE	DRAWING NO	RESTRICTED TO
A1	00779	C-534245	–

SCALE	SHEET	OF	REV
4:1	1	1	J2