MATERIALS	
BODY	BRASS NICKEL PLATED
CONTACT	SILVER PLATED
INSULATOR	PTFE

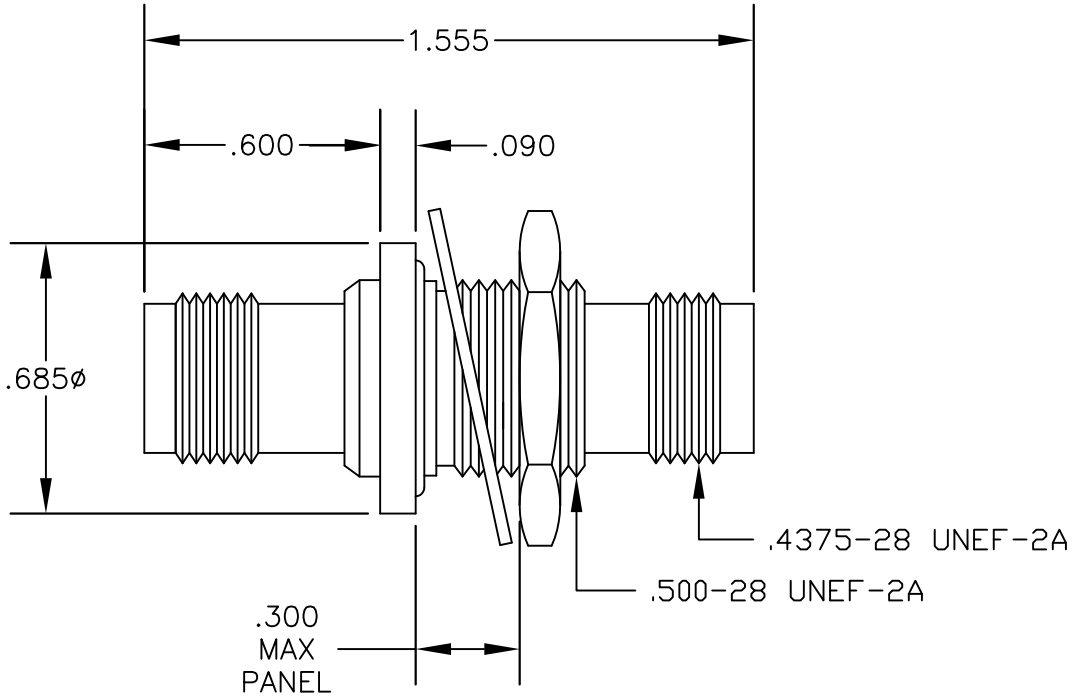

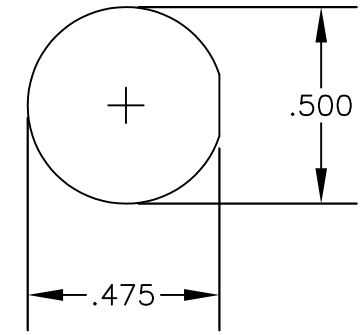

MOUNTING HOLE

PASTERNACK ENTERPRISES®
ESTABLISHED 1972

PASTERNACK ENTERPRISES, INC.
P.O BOX 16759, IRVINE, CA 92623
PHONE (949) 261-1920 FAX (949) 261-7451

WEB ADDRESS: www.pasternack.com
E-MAIL ADDRESS: sales@pasternack.com

COAXIAL & FIBER OPTICS

DWG TITLE	DES.
PE9154	TNC FEMALE BULKHEAD TO FEMALE HERMETICALLY SEALED

SIZE A	FSCM NO. 53919	CAD FILE 082802	SCALE N/A		127

NOTES:
1. UNLESS OTHERWISE SPECIFIED ALL DIMENSIONS ARE NOMINAL.
2. ALL SPECIFICATIONS ARE SUBJECT TO CHANGE WITHOUT NOTICE AT ANY TIME.