Accessories Interface Plug-in Relay XT

- **For Interface Plug-in Relay XT, pinning 5mm**
- **Retainer clip with ejection function**
- **Easy replacement of relays on a densely packed DIN rail**
- **No reduction of protection class or creepage/clearance with plastic retainer**
- **Simple plug-in indicator- and protection modules**
- **White snap-on marking tags**
- **RoHS compliant (Directive 2002/95/EC)**

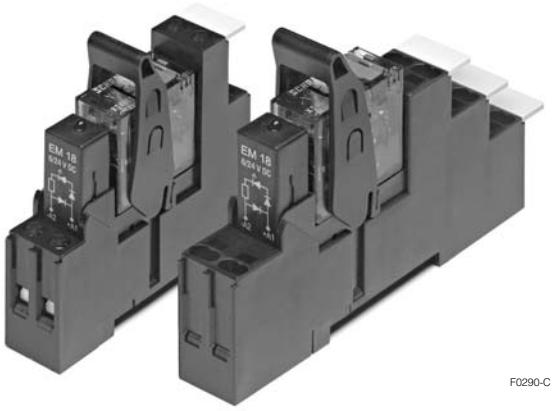

Premium socket with screwless terminals for DIN rail mounting

RT 78 72P Premium socket, logical terminal arrangement

- **Screwless Clamps**
- **Mounting of solid wires without tool**
- **Double Clamps per terminal**
- **Jumper bars for interconnection**
- **Open coil circuit for active modules**
- **Logical terminal arrangement**

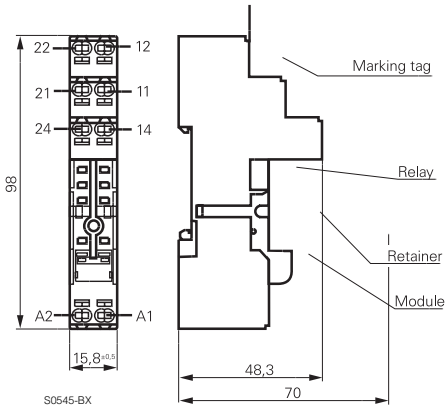

Approvals

VDE REG.-Nr. 6106 in preparation, c UL us E135149

*) For 1 pole relays (16 A) the relay terminals 11-21, 12-22 and 14-24 have to be bridged.

Technical data

Rated current	2 x 8 A, 16 A*)
Rated voltage / max.switching voltage AC	240/400 VAC
Dielectric strength coil-contact circuit	5000 Vrms
open contact circuit	1000 Vrms
adjacent contact circuits	2500 Vrms
Clearance / creepage coil-contact circuit	≥ 10 / 10 mm
Material group of insulation parts	≥ IIIa
Insulation to IEC 60664-1	
Type of insulation coil-contact circuit	reinforced
open contact circuit	functional
adjacent contact circuits	functional
Rated insulation voltage	250 V
Pollution degree	2
Rated voltage system	230/400 V
Overvoltage category	III
RoHS - Directive 2002/95/EC	compliant
Degree of protection DIN 40050	IP20

Derating curve RT7872P

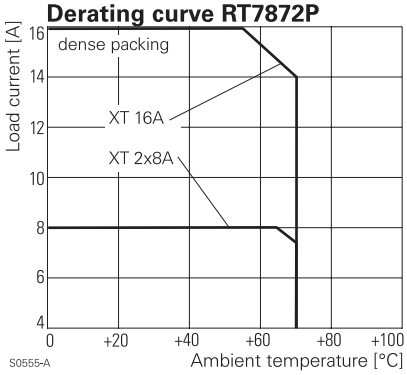

Datasheet Rev. GA1
Issued 2007/01
www.tycoelectronics.com
www.schrackrelays.com

Dimensions are in mm unless otherwise specified and are shown for reference purposes only.

Product specification according to IEC 61810-1. Product data, technical parameters, test conditions and processing information only to be used together with the 'Definitions' at schrackrelays.com in the 'Schrack' section.

Specifications subject to change.

Accessories Interface Plug-in Relay XT (Continued)

Technical data (Continued)	
Ambient temperature range	
for mounting/handling	-20...+70°C
in operation	-40...+70°C
Terminals	screwless
Wire strip length	12 mm
Wire cross section	
solid wire	1 x 0.75/1/1.5 mm^2
	2 x 0.75/1 mm^2
with standard isolation (no oversize isolation)	2 x 1.5 mm^2
stranded wire	
without bootlace crimp	1 x 0.75/1/1.5 mm^2
	2 x 0.75/1 mm^2
without bootlace crimp with standard isolation	2 x 1.5 mm^2
with bootlace crimp	1 x 0.75/1 mm^2
	2 x 0.75 mm^2
with bootlace crimp without isolation or isolation min 18 mm long	1 x 1.5 mm^2

For stranded wires with braids 0.05 mm or smaller the use of bootlace crimps is recommended. When using stranded wires without bootlace crimp the clamp must be opened during insertion.

Insertion cycles	A (10)
Max. Insertion Force total	100 N
Mounting distance	0, dense packing
Weight	36 g
Packaging unit	10 pcs

Socket with screwless terminals for DIN rail mounting

Type		Part Number
RT 78 72P	Premium socket, logical terminal arrangement Socket with screwless terminals, pinning 5 mm for DIN rail mounting	1860200-1

Accessories for RT 78 72P

Type		Part Number
RT 17 016	Plastic retaining clip, relay height 15.7 and 25.5 mm	1-1415038-1
RT 17 040	Marking tag	2-1415038-1
RT 17 0P1	Jumper bar	1860211-1

How to use, Precautions

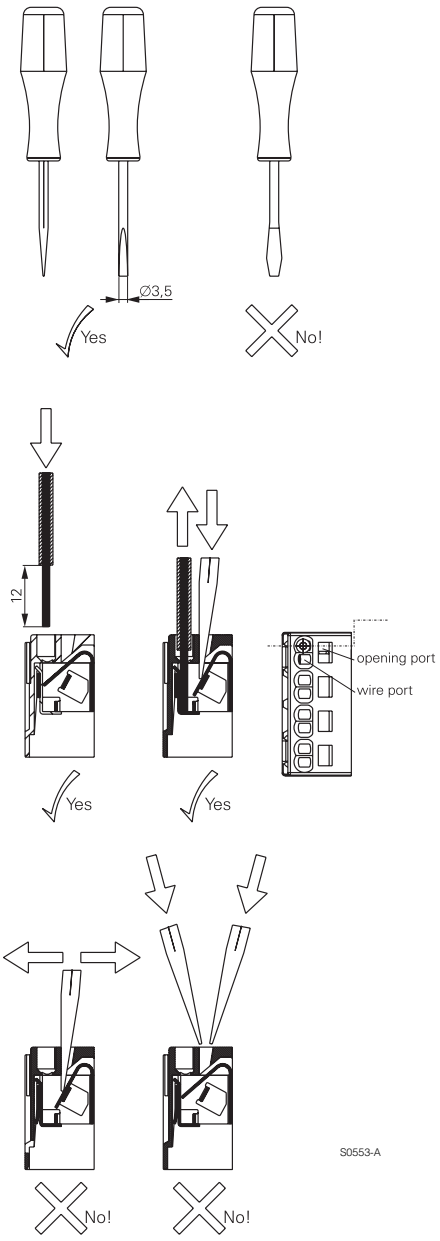

Jumper bar

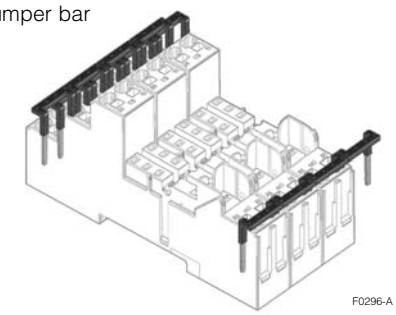

Datasheet Rev. GA1
Issued 2007/01
www.tycoelectronics.com
www.schrackrelays.com

Dimensions are in mm unless otherwise specified and are shown for reference purposes only.

Product specification according to IEC 61810-1. Product data, technical parameters, test conditions and processing information only to be used together with the 'Definitions' at schrackrelays.com in the 'Schrack' section.

Specifications subject to change.

tyco

Electronics

Dimensions are in mm unless otherwise specified and are shown for reference purposes only.

Product specification according to IEC 61810-1. Product data, technical parameters, test conditions and processing information only to be used together with the 'Definitions' at schrackrelays.com in the 'Schrack' section.

Specifications subject to change.