Date	SYM	REVISION RECORD	AUTH	DR.	CK.
8/11/07	C	Updated specifications	T.B.	B.S.	
11/21/07	D	Dim. 5.30 was 5.00	T.B.	B.S.	
6/06/08	F	Temperature ragnge was -40°C to +315°C	T.B.	B.S.	
12/07/12	G	Updated material	T.B.	B.S.	
4/25/14	H	Updated to ROHS 2 compliant	T.B.	B.S.	

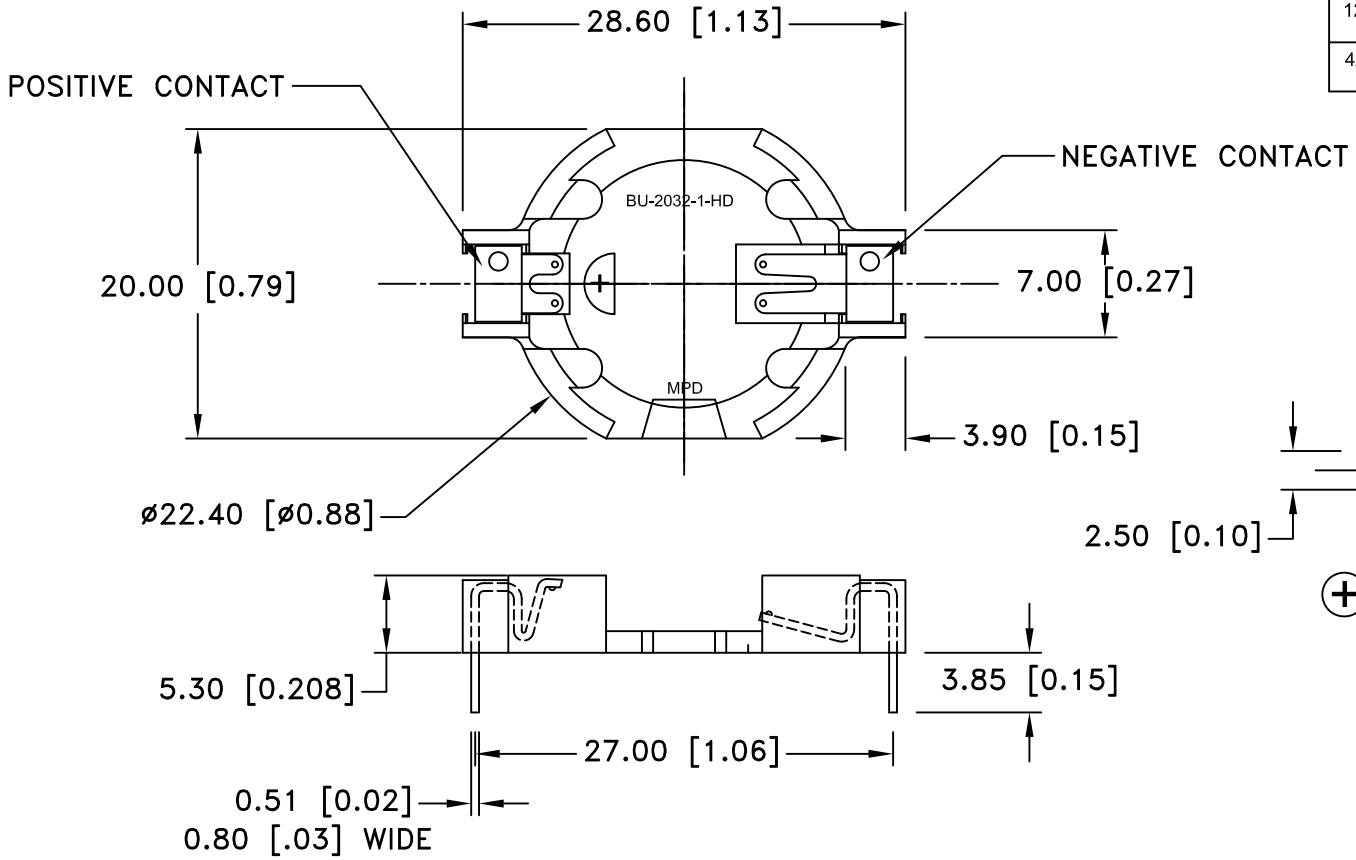

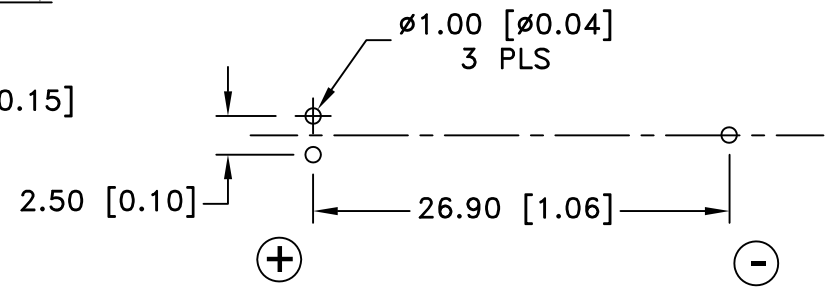

PCB LAYOUT

SPECIFICATIONS:

* Holder material- Black, Nylon 66, UL File No. E44716, UL94V-0
* Contacts : 0.020" thick PHOS-BRONZE, GOLD FLASH
* Temperature range: -40°C to +280°C
* Vibration Test: 10-50-10 Hz sweeped in 60 seconds
  X,Y,Z direction: 1 hour each direction
* Result: No dislodgement of the cell or damage
  No discontinuity over 10 micro-seconds
* Shock Test: Half sine wave acceleration 150G. 6 ms
  3 shock pulses each direction per axis, total of 18 pulses
* Result: No evidence of physical damage
* ROHS 2 COMPLIANT

Tolerance (Except as noted)	MPD Memory Protection Devices, Inc 200 Broad Hollow Road, Farmingdale, New York 11735		
decimal ±.5 (.020)		Scale	Drawn By B.S. Approved By T.B.
Fractional ± .8 (.030)	Title HIGH GRIP BATTERY HOLDER FOR CR2032 WITH PC PINS		
Angular ± 3°	Date 4/25/14	Drawing Number BU2032-1-HD-G	