HD100102

Quintuple 2-input OR/NOR Gates

■PIN ARRANGEMENT

● HD100102

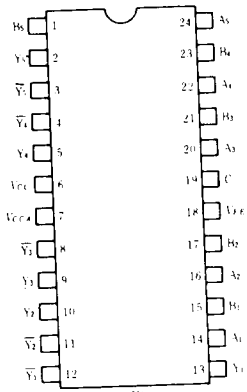

● HD100102F

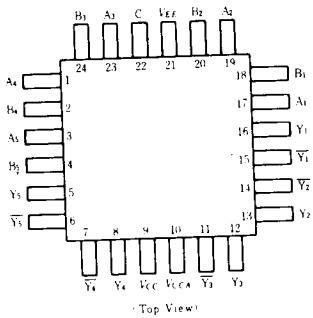

■LOGIC DIAGRAM

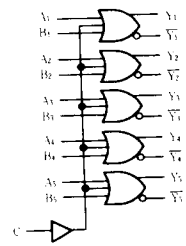

■DC CHARACTERISTICS ($V_{EE}=-4.2$ to -4.8V, $V_{CC}=V_{CCA}=$GND, $Ta=0$ to $+85$℃)

Item	Symbol	Test Condition		min	typ	max	Unit
Supply Current	I_{EE}	All input open		38	55	80	mA
Input Current	I_{IH}	$V_{IN}=V_{IH\ max}$	Enable	—	—	300	μA
			All input except Enable	—	—	350	μA

Note) As for other items, refer to the "Common DC Characteristics".

■AC CHARACTERISTICS ($V_{EE}=-2.2$ to -2.8V, $V_{CC}=V_{CCA}=2.0$V,)

● HD100102

Item	Symbol	Test Condition		0℃		25℃			85℃		Unit
				min	max	min	typ	max	min	max	
Propagation Delay Time	t_{PLH} t_{PHL}	See test circuit and waveform	Data→Output	0.50	1.20	0.50	0.75	1.25	0.50	1.30	ns
			Enable→Output	0.90	2.00	0.90	1.50	2.00	0.95	2.00	
Transition Time	t_{TLH} t_{THL}			0.40	1.20	0.40	0.70	1.20	0.40	1.10	ns

● HD100102F

Item	Symbol	Test Condition		0℃		25℃			85℃		Unit
				min	max	min	typ	max	min	max	
Propagation Delay Time	t_{PLH} t_{PHL}	See test circuit and waveform	Data→Output	0.50	0.95	0.50	0.75	0.95	0.50	1.05	ns
			Enable→Output	0.90	1.95	0.90	1.50	1.95	0.90	2.00	
Transition Time	t_{TLH} t_{THL}			0.45	1.10	0.45	0.70	1.10	0.45	1.05	ns

Note) the circuits in a test socket or mounted on a printed circuit board and transverse air flow greater than 2.5m/s (500 linear fpm) is maintained.

HITACHI

Powered by ICminer.com Electronic-Library Service CopyRight 2003