PART No. 26-01-1**6

ENG. No. SD-5145-NAH

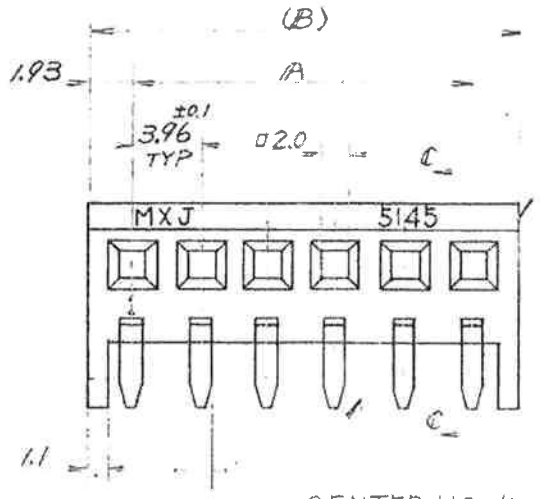

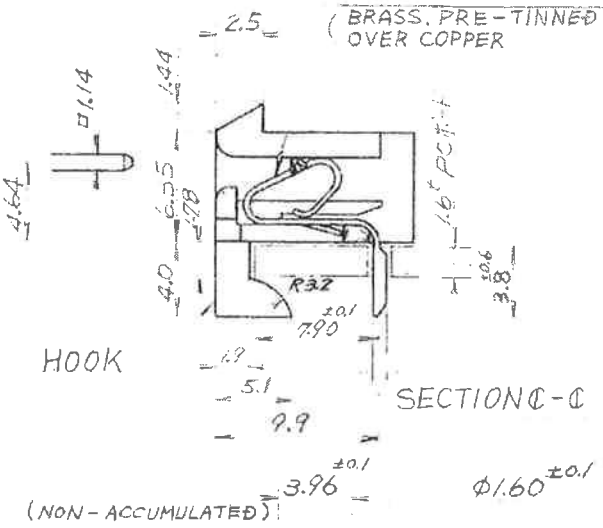

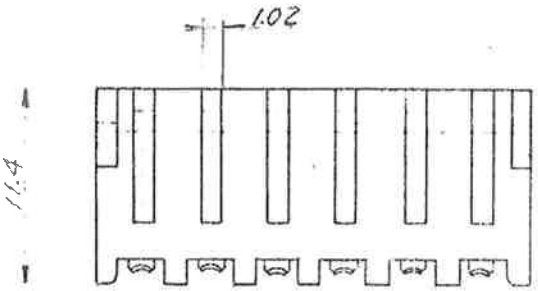

NOTE ( ) : REFERENCE

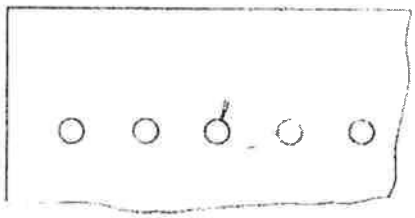

RECOMMENDED P.C.BOARD HOLE DIM.

ENG. No.	PART No.	NO. OF CKTS.	A DIM.	(B) DIM.	CENTER HOOK LOCATION BETWEEN CKTS.
5145-11AH	26-01-1116	11	39.6 ±0.25	43.46	5 & 6
-11AH	-1116	11	[illegible]	[illegible]	—
-12AH	-1126	12	43.56 ±0.25	47.42	4 & 5 & 7
-10AH	-1106	10	35.64 ±0.25	39.50	5 & 6
-09AH	[illegible]	9	31.68 ±0.20	35.54	4 & 5
-08AH	-1086	8	27.72 ±0.20	31.58	4 & 5
-06AH	-1066	6	19.80 ±0.20	23.66	—
-05AH	-1056	5	15.84 ±0.15	19.70	—
-04AH	-1046	4	11.88 ±0.15	15.74	—
-03AH	-1036	3	7.92 ±0.15	11.78	—
5145-02AH	26-01-1026	2	3.96 ±0.10	7.82	—

LTR 記号	REVISIONS 変更内容	DATE	NAME	
H	REVISED [illegible]	08/8/19	NA HT	
G	ADDED "11AH" BY ECN No. 4555	11/20/85	S.S H.H	

DIMENSION SHOWN IN MM / INCH

UNLESS OTHERWISE SPECIFIED TOLERANCE

.000 ±0.05

.00 ±0.25

.0 ±0.5

DO NOT SCALE DRAWING

DRWG. [illegible]

DSN'D [illegible]

CHK'D [illegible]

APP'D [illegible]

TITLE KK3.96 SOLDER REC. HSG. ASSY

molex

MOLEX (JAPAN) CO., LTD.

日本モレックス株式会社

558, FUKAMI, YAMATO, KANAGAWA, JAPAN

PART No. 26-01-1**6

SIZE A

ENG. No. SD-5145-NAH

REV. H

THIS DRAWING CONTAINS INFORMATION THAT IS PROPRIETARY TO MOLEX (JAPAN) AND SHOULD NOT BE USED WITHOUT WRITTEN PERMISSION

本図面は日本モレックス㈱の所有する情報を含むもので[illegible]

DWG. NO. SD-5145-NAH

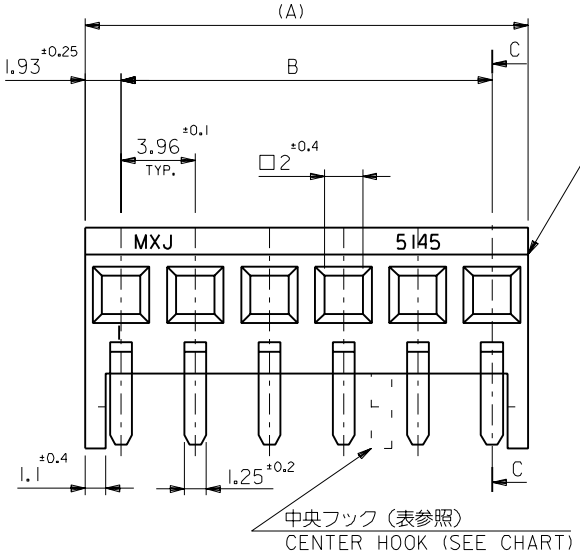

ハウジング（ナイロン66、UL94V−2）
HOUSING (NYLON 66, UL94V-2)

ターミナル（黄銅、銅下付錫メッキ）
TERMINAL (BRASS, TIN OVER COPPER PLATE)

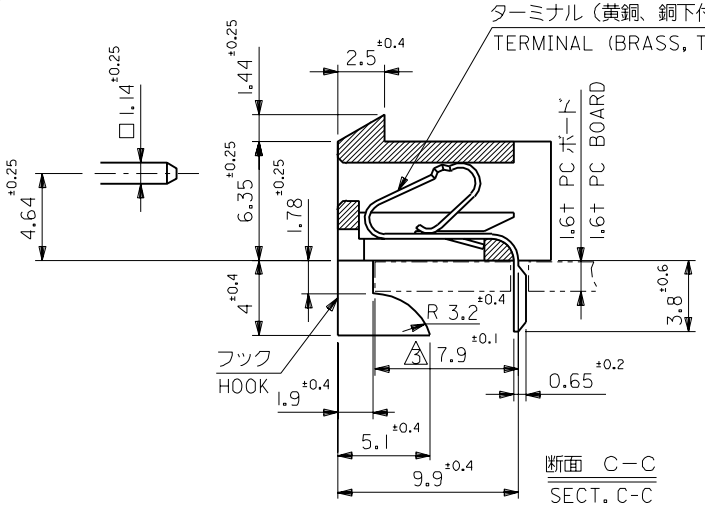

断面 C−C
SECT. C-C

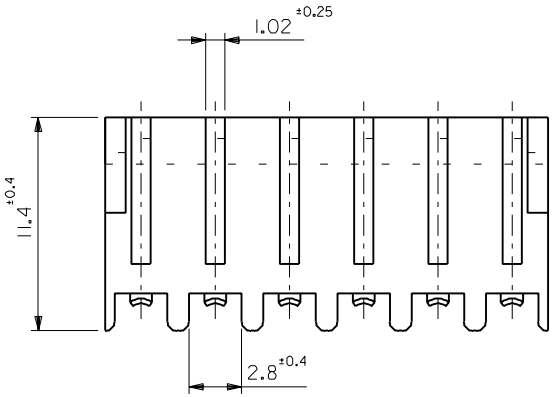

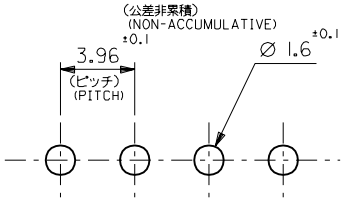

基板取付穴推奨寸法
RECOMMENDED PC BOARD HOLE DIMENSION

5と6、10と11の間 BETWEEN 5 AND 6, 10 AND 11	55.44 ±0.3	59.3	26-01-1156	5145-15AH	15
4と5、8と9の間 BETWEEN 4 AND 5, 8 AND 9	43.56 ±0.25	47.42	-1126	-12AH	12
5と6の間 BETWEEN 5 AND 6	39.6 ±0.25	43.46	-1116	-11AH	11
5と6の間 BETWEEN 5 AND 6	35.64 ±0.25	39.5	-1106	-10AH	10
4と5の間 BETWEEN 4 AND 5	31.68 ±0.2	35.54	-1096	-09AH	9
4と5の間 BETWEEN 4 AND 5	27.72 ±0.2	31.58	-1086	-08AH	8
〃	23.76 ±0.2	27.62	-1076	-07AH	7
〃	19.8 ±0.2	23.66	-1066	-06AH	6
〃	15.84 ±0.15	19.7	-1056	-05AH	5
〃	11.88 ±0.15	15.74	-1046	-04AH	4
〃	7.92 ±0.15	11.78	-1036	-03AH	3
〃	3.96 ±0.1	7.82	26-01-1026	5145-02AH	2
中央フック位置 CENTER HOOK	B	(A)	PART. NO.	ENG. NO.	極数 NO. OF CKTS.

注記
NOTE

1. 端回路リブ付き
   RIB STICK TO END CIRCUIT
2. (　) 内寸法は参考値とする。
   ( ) DIMENSION IS FOR REFERENCE

△3 P. C. BOARD端面から基板穴までの距離
LENGTH FROM P. C. BOARD HOLE TO EDGE

角度 ANGLE	±3°
30 以上 OVER	±0.3
10 以上 30 未満 OVER UNDER	±0.25
10 未満 UNDER	±0.2
一般公差 GENERAL TOLERANCES	

記号 LTR	変更内容 REVISION RECORD	DR.	CHK.	日付 DATE
K	変更 REVISED (JC80184)	S.N	M.F	'97/09/01
J	再作図 REDRAWN (JC70319)	S.A	M.F	'96/05/24

材料 ハウジング：ナイロン66.UL94V−2
MATERIAL HOUSING:NYLON 66, UL94V-2
ターミナル：黄銅、銅下付錫メッキ 0.254t
TERMINAL:BRASS, TIN OVER COPPER PLATE 0.254t

仕上げ FINISH 〃

適用電線範囲 WIRE RANGE 〃

被覆外径 INS. RANGE 〃

DRAWN BY '96/05/24 S.ANDO
CHK'D BY '97/09/02 Y.MIZUNO
APP'D BY '97/09/02 M.FUKUSHIMA
尺度 SCALE 4 : 1

MOLEX-JAPAN CO.,LTD.
日本モレックス株式会社

REVISE ONLY ON CAD SYSTEM

TITLE 名称
KK3.96 SOLDER
REC. HSG. ASSY

DWG. NO. SD-5145-NAH
REV K

:MM DIMENSIONS IN METRIC DO NOT SCALE DRAWING

5145.S20

THIS DRAWING CONTAINS INFORMATION THAT IS PROPRIETARY TO MOLEX(JAPAN) AND SHOULD NOT BE USED WITHOUT WRITTEN PERMISSION
本図面は日本モレックス（株）の所有する情報を含むもので当社の許可なく複製を禁止する。

EN-01C(032)MXJ-32