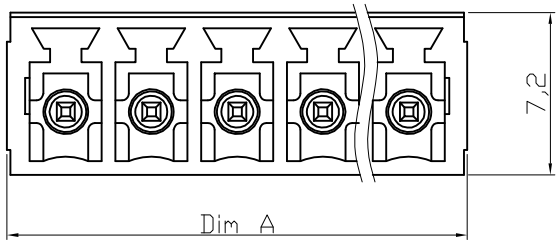

② Dimension

③

DIM A	(N-1)x3.81+5.0
DIM B	(N-1)x3.81

N=Number of poles

Poles	Tolerance
2P-6P	±0.15
7P-12P	±0.20
13P-18P	±0.25
19P-24P	±0.30

② Material

Item ⓐ Male contact pin: Copper Tin plated

Item ⓑ Termimal(housing):Thermoplastic (UL94V-0)
Green(RAL6018/T)

Electrical cULus/VDE

Voltage rating: 300V/300V

Current rating: 10A/10.5A

Withstanding Voltage: 1.6KV/2.5KV

Operating temperature: -40°C to +115°C

Soldering temperature: 250°C±10°C/5 Sec

Safety Approval: cULus VDE

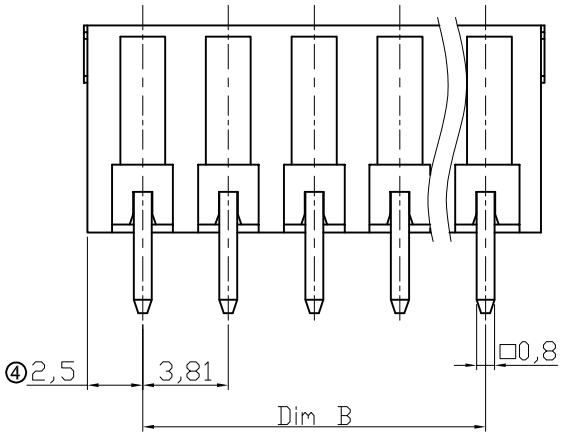

N= NUMBER OF CONTACTS

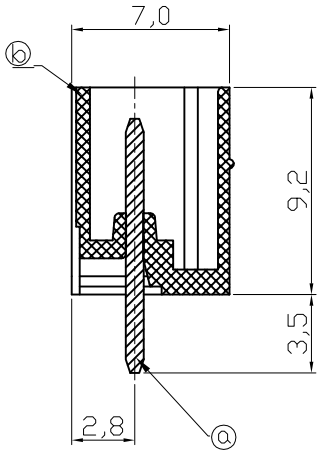

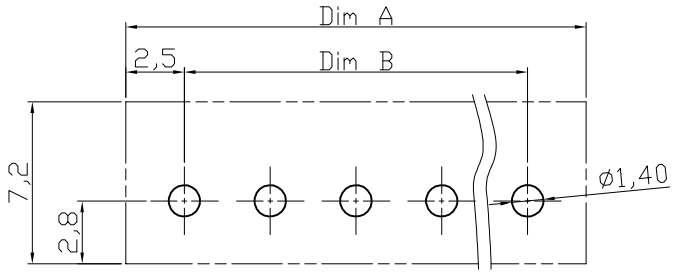

Recommended P.C.B LAYOUT

RoHS compliant

Unit: mm

⑤ UL File No.: E349947

Scale	Free
TOLERANCE	
X.	±0.50
X.X	±0.30
X.XX	±0.10
DIM	TOL
X.°	±1°
Angle	TOL

Id.	Modification	Date	Name		Date	Name
⑤	Add UL	15.03.2016	Amy	Drawn	10.12.2009	Dean
④	Update the dimension	09.01.2015	Amy	Approved	15.03.2016	Amy
③	Update	13.03.2013	Amy			
②	Update	06.03.2013	Amy			
①	Drawn	10.12.2009	Dean			

ASSMANN WSW components

Customer-No.

ASSMANN WSW-No.
A-TB381-OQxxCV

Drawing-No.
ASS 3829 CO

rev05

Replace

Sheet

SV3142
SV4107